AREM

THE VENTILATION PERFORMANCE

CATALOG

AREM is one of the largest French manufacturers of fans known throughout Europe.

AREM is especially known for its experience in making axial fans. Belt-driven and direct-driven, with short or long casings, with or without venturi, they are all designed in accordance with the specifications for the numerous applications for which they are intended.

Centrifugal fans using forwards or backwards inclined blades have just joined this range, which is one of the most extensive on the market.

AXIALS AREM

THE VENTILATION PERFORMANCE

	SMOKE EXTRACTION	GENERAL VENTILATION	EXPLOSIVE ATMOSPHERES	COOLING	DRYING	INDUSTRIAL VENTILATION
AXUS RANGE : AX BX CX EX	✓	✓	✓	✓	✓	✓
PAF HATCH	✓	✓	✓	✗	✗	✗
TH TV TD	✓	✓	✓	✓	✓	✓
JFA CFD STUDY	✓	✓	✗	✗	✗	✗
DA DA ECM	✗	✓	✗	Available on request	Available on request	Available on request
AXUS EC RANGE : AX BX CX EX	✗	✓	✗	✓	✓	✓

Direct-driven...

...Belt-driven

Soundproof plenum box...

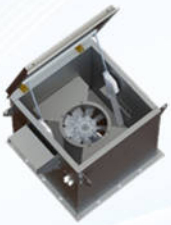

...With motorized opening

Roof fan - Horizontal discharge

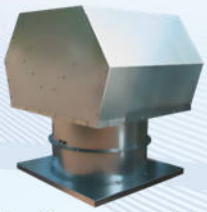

Roof fan -Vertical discharge

Jet fan (Accelerator)

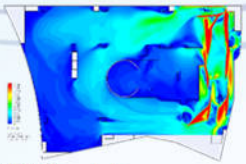

CFD Simulation

Wall-mounted

... With ECM

Axus with EC motors

...Specific with EC motors

CENTRIFUGALS

AREM
THE VENTILATION PERFORMANCE

	SMOKE EXTRACTION	GENERAL VENTILATION	EXPLOSIVE ATMOSPHERES	COOLING	DRYING	INDUSTRIAL VENTILATION
BACKWARD CURVED FAN : G Series R Series V Series Z Series VRD/VRDGT RL/RM EC	✓	✓	✓	Available on request	✓	✓
FORWARD CURVED FAN : C Series VAD TDA TMD	✓	✓	✓	Available on request	✗	✗
CELN **CELN EC** **VGND** **VGNT**	✓	✓	✗	Available on request	✗	✗
JFC **CFD STUDY**	✓	✓	✗	✗	✗	✗
TCH **TCV** **TCO** **TCVP**	✗	✓	✓	✓	✓	✓
SMALL DIAMETER : **CP** **CB**	✗	✓	✓	✗	✗	Available on request


Direct-driven...


...Belt-driven


Direct-driven...

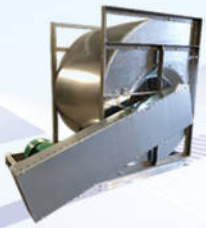
...Belt-driven


Plenum box – backwards inclined blades


Plenum box – forwards inclined blades

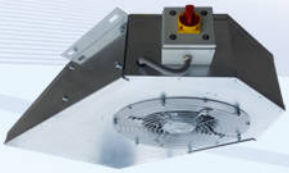
Jet fan (Accelerator)

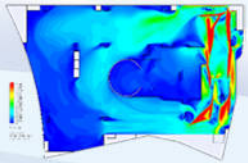
CFD Simulation


Roof fan with horizontal discharge


Roof fan with vertical discharge


Plastic casing...


...Steel casing

CONTENTS

GENERAL VENTILATION – AXIALS

DESCRIPTION

We have a wide range from diameter 250mm to 2400mm, from a few hundred m3/h to 360,000m3/h, with motors with 2, 4 and 6 poles, 1 or 2 speeds. Our fans might also be suitable for use in geographic areas with specific electricity networks, i.e. 60 Hz.
Other motor speeds are available on request.

APPLICATION

Air extraction or blowing in an ambient environment:

- Car parks and high-rise buildings
- Hospitals
- Stations and airports
- Hypermarkets
- Canteens
- Workshops

More generally, establishments open to the public or employees.

FLUID TEMPERATURE

The standard operating temperatures are from -20°C to +40°C with a class F motor.
On request, fans fitted with a class H motor can operate in environments up to +130°C.

CONSTRUCTION

Our fans are made in our factory, with pre-galvanized steel as standard. To meet your particular requirements, we can manufacture upon request:

- Stainless steel 304L or 316L
- Hot-dip galvanized steel
- Surface treatment with epoxy paint

Solutions with EC motors are available in direct-drive or belt-drive. Please ask us.

- ✓ ***AXUS range: AX - BX - CX***
- ✓ ***Surface-mounted: DA - DA EC***
- ✓ ***Belt-drive EX***
- ✓ ***Roof fans: TH - TV***
- ✓ ***Electronically commutated***

ANCILLARIES

In line with your requirements, we have safety guards, support feet, rigid coupling flanges, outlet backdraught dampers, on-off switch connectors, etc. to simplify your installation. See **ANCILLARIES** for more information.

OPTION

We can wire motors, switch connectors, make special productions, etc. and study your requirements to meet your specifications and constraints.

Reminder: All conventional and normative elements are presented in the **STANDARDS-RULES-CONVENTIONS** tab. All ancillaries are presented in the **ANCILLARIES** tab at the end of the catalog. Please contact the sales team for your specific requirements.

AXUS PERFORMANCES: 4 Poles (1500 rpm)

Common operating range

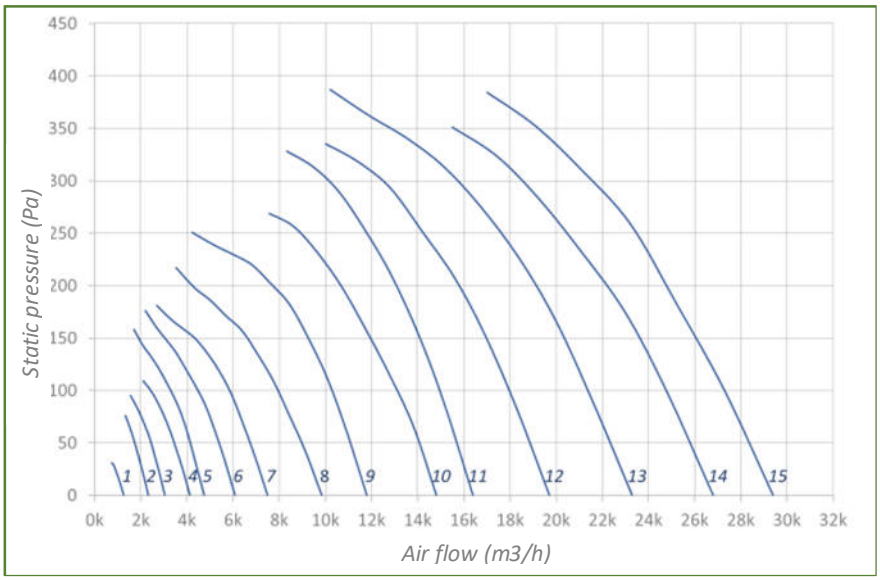

Curve No.	Ø mm	Power kW	Current A
1	250	0.09	0.3
2	315	0.09	0.3
3	350	0.09	0.3
4	400	0.12	0.4
5	450	0.18	0.5
6	500	0.25	0.7
7	500	0.37	1.1
8	560	0.55	1.5
9	560	0.75	1.9
10	630	1.10	2.6
11	630	1.50	3.4
12	630	2.20	4.6
13	700	2.20	4.6
14	700	3.00	6.3
15	800	3.00	6.3

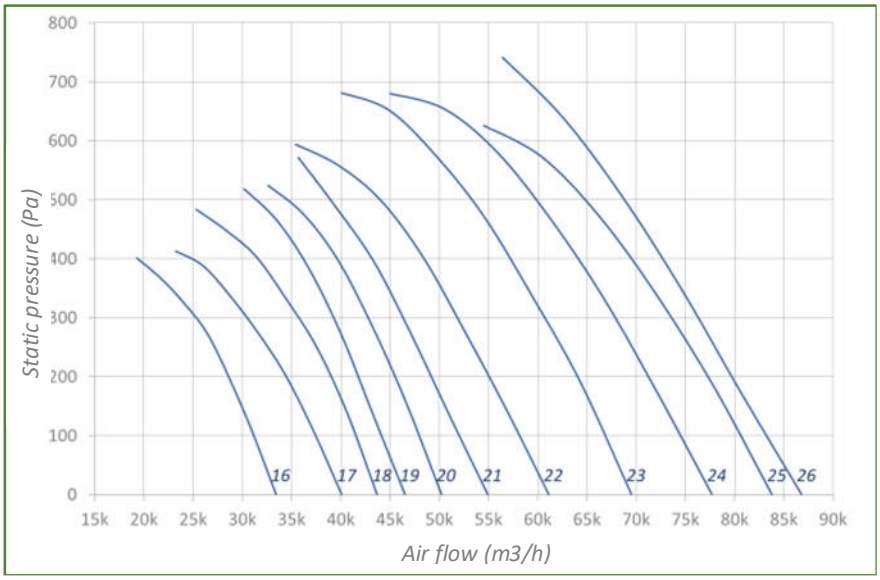

Curve No.	Ø mm	Power kW	Current A
16	800	4.00	8.2
17	800	5.50	11.1
18	800	7.50	14.3
19	900	7.50	14.3
20	900	9.50	17.8
21	900	11.00	20.7
22	900	15.00	27.7
23	1000	15.00	27.7
24	1000	18.50	35.4
25	1000	22.00	42.2
26	1000	30.00	53.8

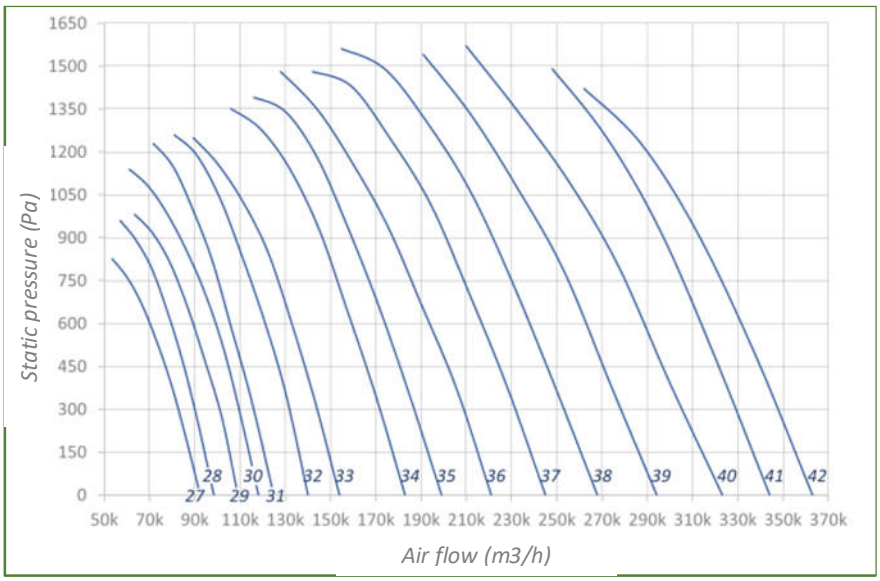

Curve No.	Ø mm	Power kW	Current A
27	1120	22.00	42.2
28	1120	30.00	53.8
29	1120	37.00	66.4
30	1250	30.00	53.8
31	1250	45.00	81.3
32	1250	55.00	97.6
33	1400	55.00	97.6
34	1400	75.00	131.2
35	1400	90.00	160.5
36	1600	90.00	160.5
37	1600	110.00	189.3
38	1600	132.00	226.5
39	1600	160.00	267.8
40	1600	200.00	334.8
41	1600	250.00	448.4
42	1600	315.00	558.3

Notes:

The current is indicated for a 400V/50Hz electricity network, variable depending on the motorization.

The curves represent just a very small part of air flow possibilities.

AXUS PERFORMANCES: 6 Poles (1000 rpm)

Common operating range

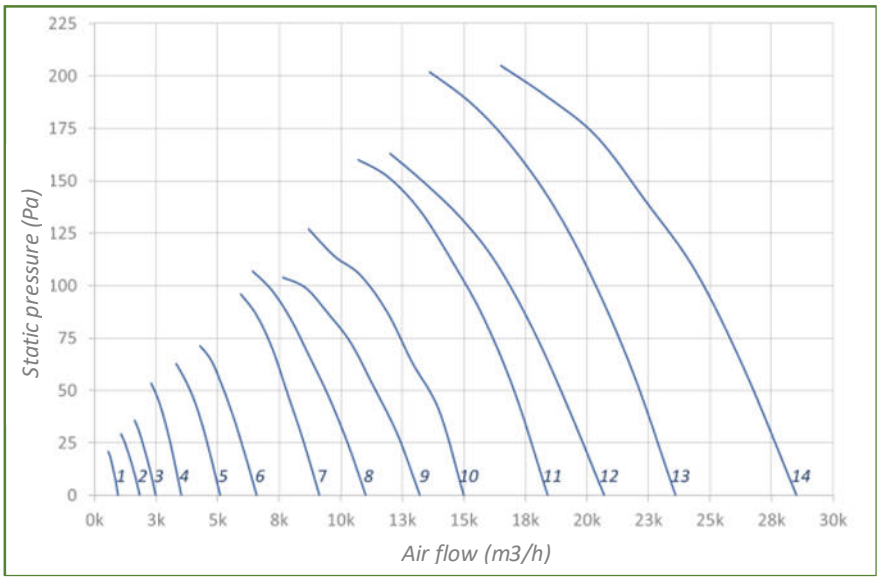

Curve No.	Ø mm	Power kW	Current A
1	250	0.09	0.5
2	315	0.09	0.5
3	350	0.09	0.5
4	400	0.12	0.6
5	450	0.18	0.7
6	500	0.25	0.8
7	560	0.37	1.1
8	630	0.37	1.1
9	630	0.55	1.5
10	630	0.75	2.1
11	710	1.10	2.6
12	800	1.10	2.6
13	800	1.50	3.9
14	800	2.20	5.2

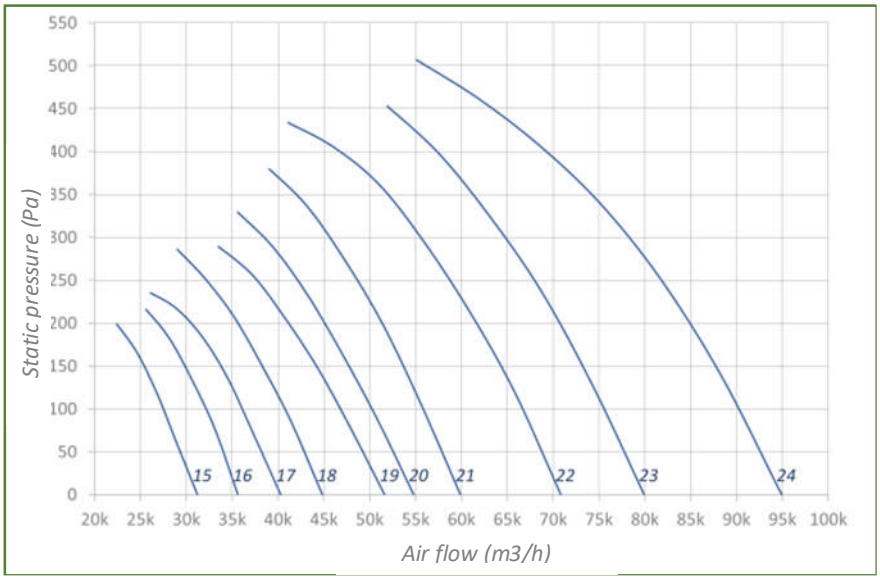

Curve No.	Ø mm	Power kW	Current A
15	900	2.20	5.2
16	900	3.00	7.3
17	900	4.00	9.1
18	1000	4.00	9.1
19	1000	5.50	12.7
20	1000	7.50	16.9
21	1120	9.20	19.1
22	1120	11.00	22.5
23	1120	15.00	28.6
24	1250	18.50	36.4

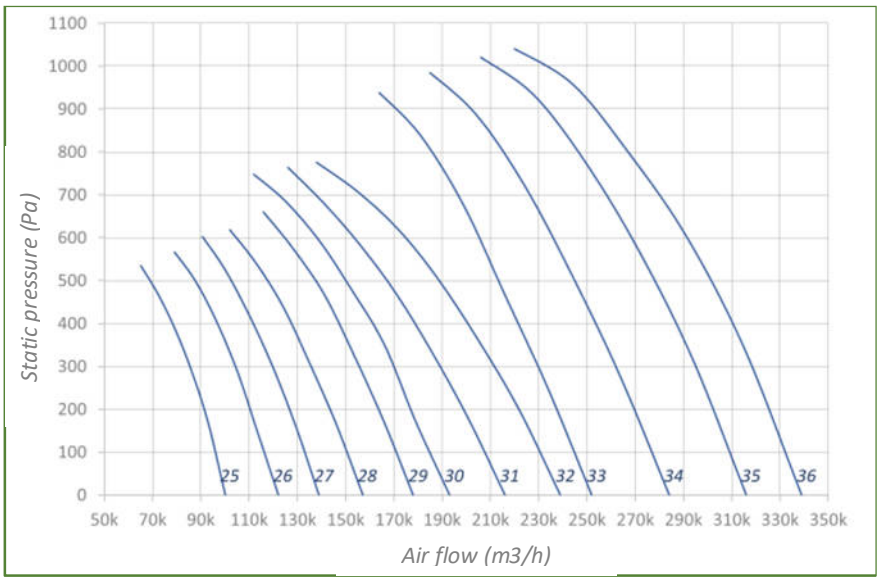

Curve No.	Ø mm	Power kW	Current A
25	1250	22.00	43.1
26	1400	22.00	43.1
27	1400	30.00	53.1
28	1600	30.00	53.1
29	1600	37.00	67.3
30	1600	45.00	83.5
31	1800	45.00	83.5
32	1800	55.00	99.3
33	2000	75.00	139.6
34	2000	90.00	166.9
35	2000	110.00	203.6
36	2000	132.00	243.6

Notes:

The current is indicated for a 400V/50Hz electricity network, variable depending on the motorization.

The curves represent just a very small part of air flow possibilities.

AXUS PERFORMANCES: 2 Poles (3000 rpm)

Common operating range

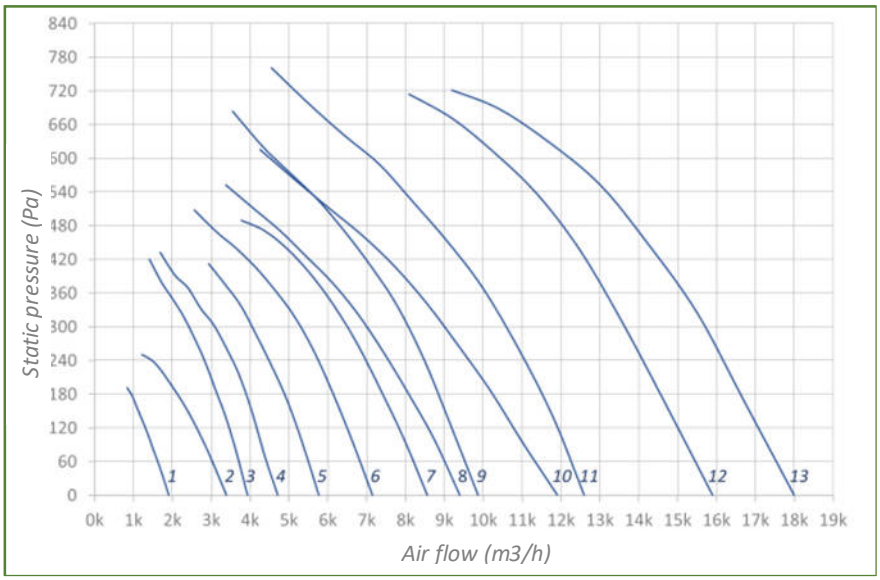

Curve No.	Ø mm	Power kW	Current A
1	250	0.12	0.4
2	315	0.18	0.5
3	350	0.37	0.9
4	350	0.55	1.3
5	350	0.75	1.6
6	400	0.75	1.6
7	400	1.10	2.3
8	450	1.10	2.3
9	450	1.50	3.2
10	500	1.50	3.2
11	500	2.20	4.5
12	500	3.00	6.2
13	500	4.00	7.3

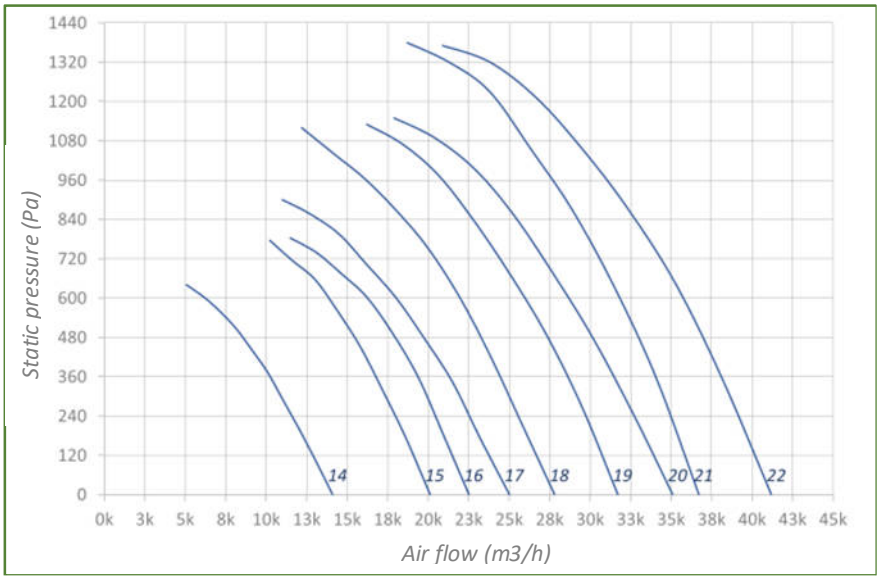

Curve No.	Ø mm	Power kW	Current A
14	560	2.20	4.5
15	560	4.00	7.3
16	560	5.50	9.8
17	630	5.50	9.8
18	630	7.50	13.4
19	630	9.20	16.1
20	630	11.00	18.9
21	630	15.00	26.2
22	630	18.50	31.8

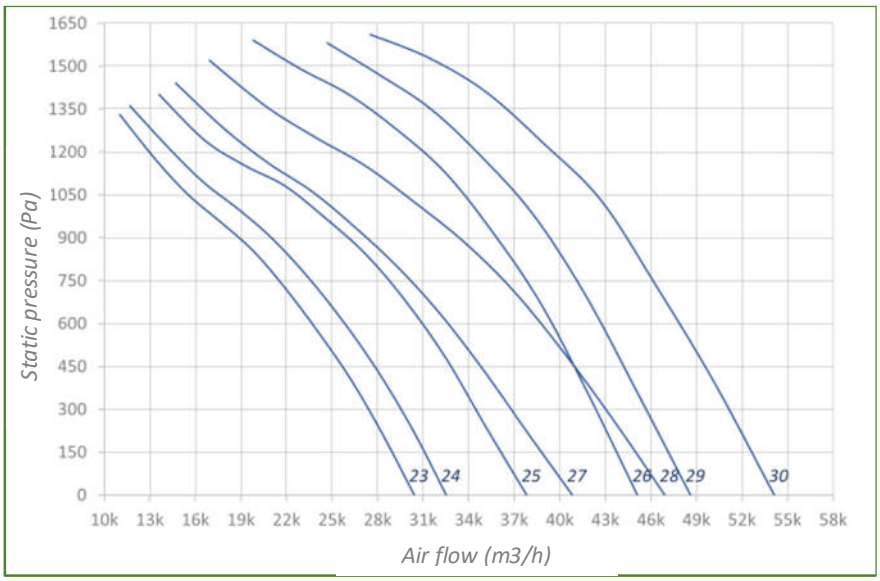

Curve No.	Ø mm	Power kW	Current A
23	710	7.50	13.4
24	710	9.20	16.1
25	710	11.00	18.9
26	710	18.50	31.8
27	800	11.00	18.9
28	800	15.00	26.2
29	800	18.50	31.8
30	800	22.00	37.6

Notes:

The current is indicated for a 400V/50Hz electricity network, variable depending on the motorization.

The curves represent just a very small part of air flow possibilities.

AX / BX DIMENSIONS

AX (long casing) - BX (short casing)

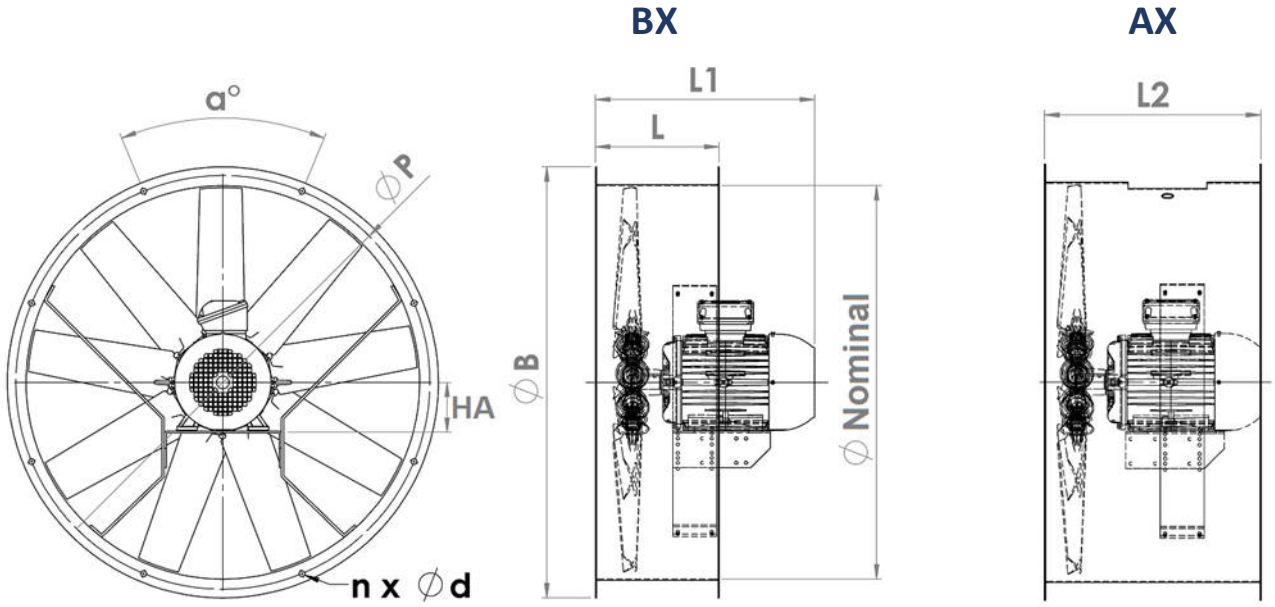

Nominal Ø mm	HA mm	L mm	L2 mm	B mm	n -	α °	d mm	P mm	AX weight* kg	BX weight* kg
250	56-71	235	350	330	6	60	9	300	13	11
315	56-80	254	350	385	6	60	12	351	24	22
350	63-90	254	350	425	6	60	12	390	29	27
400	63-100	254	440	470	6	60	12	440	41	37
450	63-112	254	440	520	6	60	12	490	58	54
500	63-112 132	254 425	440 600	572	6	60	12	540	59 98	55 92
560	71-112 132	254 425	440 600	626	6	60	12	594	62 101	57 95
630	63-112 132 160	254 425 425	440 600 675	704	6	60	12	670	65 105 139	59 99 133
710	80-112 132-160	254 425	440 675	780	6	60	12	744	69 142	62 135
800	80-112 132-160 180	254 425 425	440 675 800	885	8	45	12	850	72 177 184	65 163 170
900	90-160 180	425 425	675 800	990	12	30	15	954	188 231	171 205
1000	90-160 180 200	425 425 600	675 800 865	1090	12	30	15	1056	206 250 320	187 222 294
1120	100-180 200-225 250-280	465 665 800	800 1010 1010	1230	12	30	15	1190	266 524 689	237 485 639
1250	100-180 200-225 250-280	465 665 800	800 1010 1010	1375	12	30	15	1320	308 549 950	265 506 917
1400	132-180 200-225 250-280	650 650 800	900 1010 1010	1530	12	30	15	1480	348 586 994	326 535 957
1600	132-180 200-225 250-280	650 650 650	900 1010 1010	1730	16	22.5	15	1660	398 616 1035	350 559 993
1800	160-225 250-280	685 800	1010 1010	1930	24	15	15	1880	560 1089	607 1042

Notes:

L1 is variable depending on the motorization.

The flange drill holes are AREM type by default. Specify when ordering if your requirement is for the Eurovent standard.

*Weights are provided for information only and include the motor weights of the maximum power (without ancillaries).

For diameters greater than 1800mm, contact us.

CX DIMENSIONS

CX (short casing with inlet bellmouth)

CXB

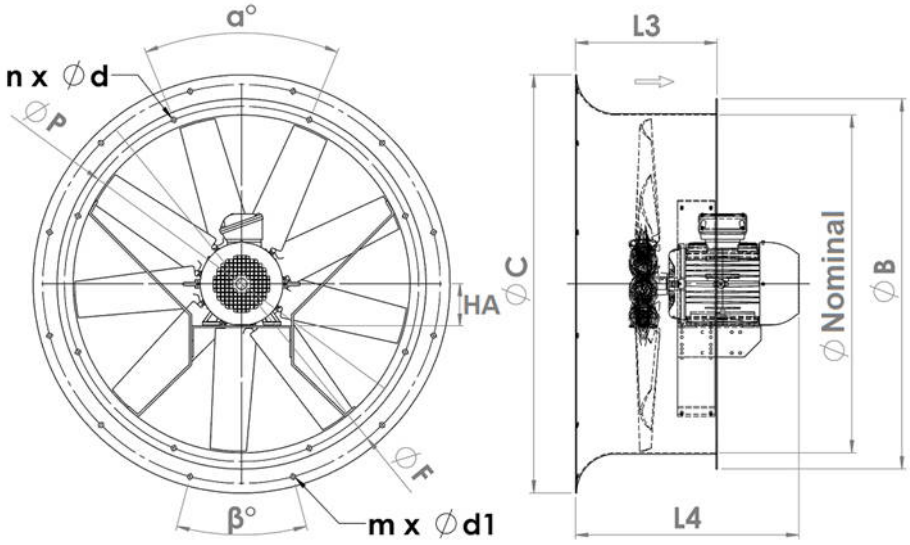

CXA

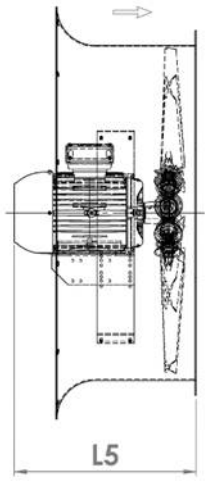

Nominal Ø mm	HA mm	L3 mm	B mm	n -	α °	d mm	P mm	C mm	m -	β °	d1 mm	F mm	CX weight* kg
250	56-71	-	330	6	60	9	300	-	-	-	-	-	-
315	56-80	-	385	6	60	12	351	-	-	-	-	-	-
350	63-90	-	425	6	60	12	390	-	-	-	-	-	-
400	63-100	330	470	6	60	12	440	530	6	60	12	490	47
450	63-112	330	520	6	60	12	490	580	6	60	12	540	60
500	63-112 132	330 425	572	6	60	12	540	685	6	60	12	642	61 101
560	71-112 132	330 425	626	6	60	12	594	715	6	60	12	670	65 105
630	63-112 132 160	330 500 500	704	6	60	12	670	790	6	60	12	744	71 113 147
710	80-112 132-160	330 500	780	6	60	12	744	900	8	45	12	850	77 150
800	80-112 132-160 180	340 565 565	885	8	45	12	850	1000	12	30	12	954	80 185 195
900	90-160 180	565 565	990	12	30	15	954	1100	12	30	15	1056	198 241
1000	90-160 180 200	565 565 675	1090	12	30	15	1056	1230	12	30	15	1190	216 255 340
1120	100-180 200-225 250-280	565 750 1110	1230	12	30	15	1190	1360	12	30	15	1320	286 554 719
1250	100-180 200-225 250-280	565 750 1110	1375	12	30	15	1320	1520	12	30	15	1480	338 579 980
1400	132-180 200-225 250-280	750 750 1110	1530	12	30	15	1480	1600	16	22.5	15	1560	388 626 1034
1600	132-180 200-225 250-280	750 750 1110	1730	16	22.5	15	1660	1810	16	22.5	15	1756	438 656 1075
1800	160-225 250-280	750 1110	1930	24	15	15	1880	2030	24	15	18	1980	605 1139

Notes:

L4 and L5 are variable depending on the motorization.

The flange drill holes are by default AREM type. Specify when ordering if your requirement is for the Eurovent standard.

*Weights are provided for information only and include the motor weights of the maximum power (without ancillaries).

For diameters greater than 1800mm, contact us.

AXUS EC – ELECTRONICALLY COMMUTATED

EC Integrated and Deported

If the fans are used daily for many hours at a time or require variability in their use, we have a range of axial fans fitted with electronically commutated motors. By means of different control modes, it is possible to adapt speeds, from the simplest to the most complicated and thus reduce the energy consumption of your installations.

These fans are fitted with high yield motors (from IE4 to IE5) and retain very high-performance levels over their entire range of use.

Characteristics:

- Diameter from 400 to 1250mm
- EC solutions with integrated or external EC
- Electronic management and communication via ModBus RS485
- Motor speed variation with 0-10V input signal
- Fast connection terminal blocks

EC Integrated

- ✓ Drive integrated in the motor
- ✓ Off / On: contact 1 or 0
- ✓ Speed feedback signal: 3 pulses/rev
- ✓ Motor fault code via Modbus
- ✓ Modbus connection: terminal blocks
- ✓ Temperature: from -20 to 45°C

EC deported

- ✓ Drive attached to the casing
- ✓ On/Off: detection 1 Volt
- ✓ Speed feedback signal: 1 pulse/rev
- ✓ Motor default code via Modbus
- ✓ Modbus connection: terminal blocks or RJ12 plug
- ✓ Temperature: from -40 to 45°C
- ✓ 2x digital inputs: terminal blocks
  - On / Off
  - Default reset
  - Direction of rotation if use of reversible impeller
  - Booster mode (full motor speed)
- ✓ 1x digital output: terminal blocks
  - Tachymeter
  - In operation LED indicator
  - Fault LED indicator

Factory settings:

- Motor with maximum speed 1500 rpm: we limit the minimum speed to 500 rpm.
- Motor with maximum speed 3000 rpm: we limit the minimum speed to 1000 rpm.
- In the external EC version, the inputs and outputs are not configured by default.

AXUS EC RANGE

Standard range

Our AXUS EC range is made in pre-galvanized steel as standard. Options in 304L or 316L stainless steel, hot-dip galvanized steel and paint coating are available on request. The range is available for single-phase and triple-phase networks for the 50/60Hz frequencies in accordance with the table below:

Diameter mm	Integrated EC Volt. 50/60Hz	External EC Volt. 50/60Hz
400	✓ (1x 230/280V)	✗
450	✓ (1x 230/280V)	✗
500	✓ (1x 230/280V)	✗
560	✓ (1x 230/280V)	✓ (1x 230/280V)
630	✓ (1x 230/280V)	✓ (3x 400/440V)
710	✓ (1x 230/280V)	✓ (3x 400/440V)
800	✓ (1x 230/280V)	✓ (3x 400/440V)
900	✗	✓ (3x 400/440V)
1000	✗	✓ (3x 400/440V)
1120	✗	✓ (3x 400/440V)
1250	✗	✓ (3x 400/440V)

Different solutions are possible to meet specific requests. Based on the standard range, we can build tailor-made products to satisfy your specific applications:

- Solution with reversible impeller, in insulated plenum box, etc.
- 480V/60Hz network, corrosive environment, etc.
- Operation at particular speeds, configuration of inputs and outputs according to demand, etc.
- Specific mounting, external drive in a technical room, etc.

Example of specific mounting: Roof fan with horizontal discharge

- ✓ EC motor with external drive
- ✓ Paint finish
- ✓ On-off switch connector
- ✓ Control in a technical room

AXUS EC INTEGRATED: Max. speed 1500 and 3000 rpm

Common operating range

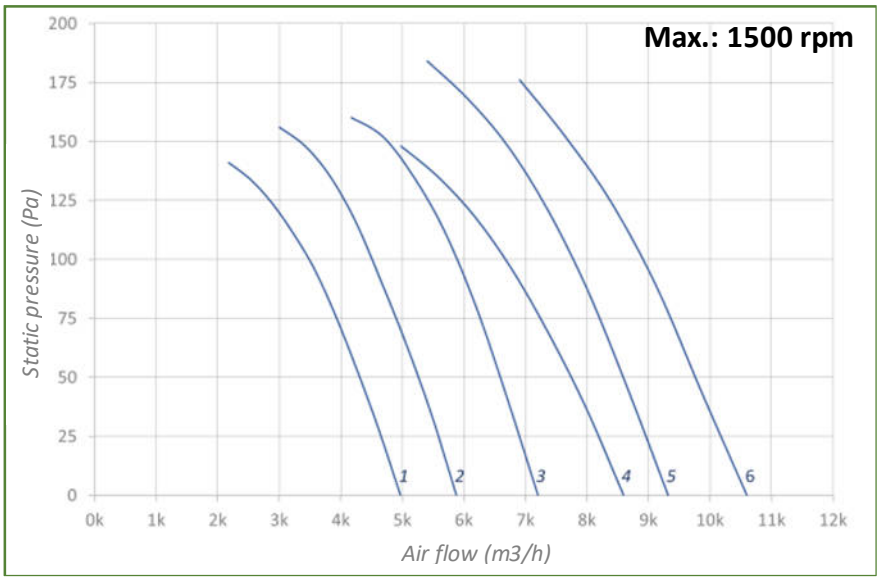

Curve No.	Ø mm	Power kW	Current A
1	400	0.20	1.6
2	400	0.40	2.8
3	450	0.40	2.8
4	500	0.40	2.8
5	500	0.55	3.6
6	500	0.80	4.8

Notes:

Frequency: 50Hz - 60Hz

Voltage: 230V - 280V

Minimum speed: 500 rpm

Maximum speed: 1500 rpm

Representation with maximum speed

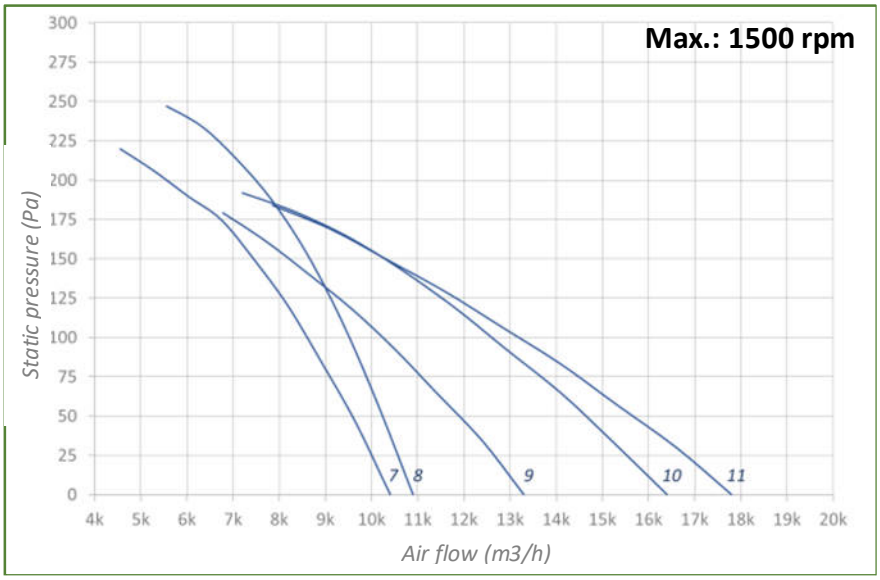

Curve No.	Ø mm	Power kW	Current A
7	560	0.80	4.8
8	560	1.10	7.0
9	630	0.80	4.8
10	710	1.10	7.0
11	800	1.10	7.0

Notes:

Frequency: 50Hz - 60Hz

Voltage: 230V - 280V

Minimum speed: 500 rpm

Maximum speed: 1500 rpm

Representation with maximum speed

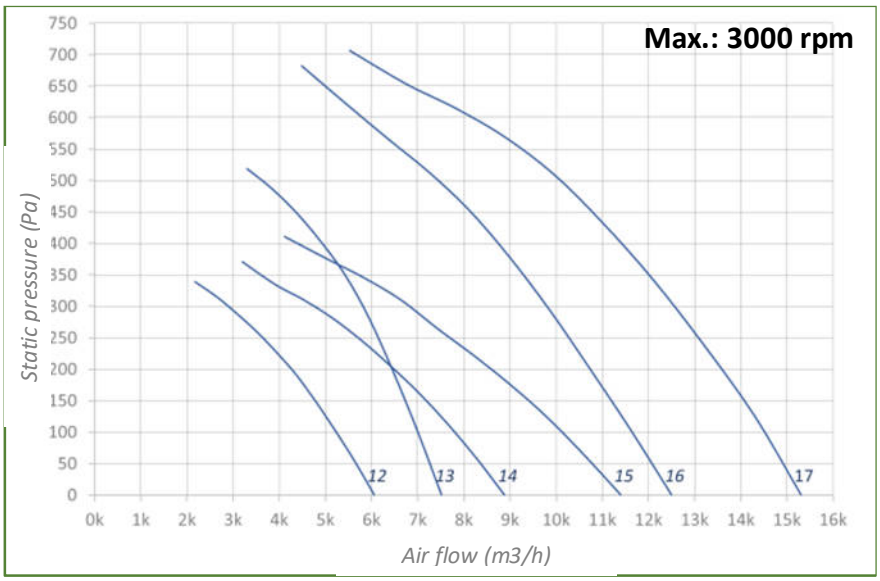

Curve No.	Ø mm	Power kW	Current A
12	400	0.40	2.8
13	400	0.80	4.8
14	450	0.80	4.8
15	500	1.10	7.0
16	500	1.50	9.6
17	500	2.20	14.0

Notes:

Frequency: 50Hz - 60Hz

Voltage: 230V - 280V

Minimum speed: 1000 rpm

Maximum speed: 3000 rpm

Representation with maximum speed

AXUS EC DEPORTED: Max. speed 1500 rpm

Common use ranges

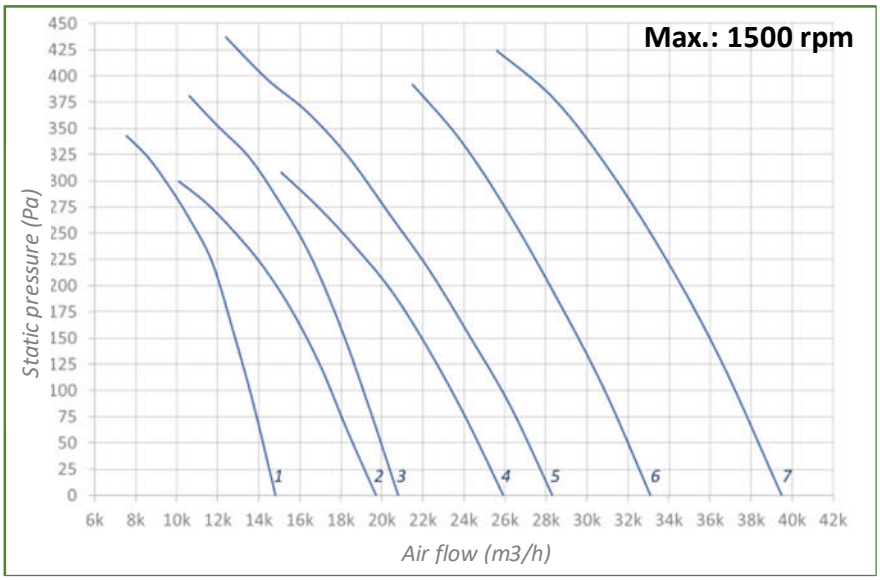

Curve No.	Ø mm	Power kW	Current A
1	630	1.50	3.4
2	710	1.50	3.4
3	710	2.20	5.1
4	800	2.20	5.1
5	900	3.00	6.4
6	900	4.00	8.5
7	900	5.50	11.6

Notes:

Frequency: 50Hz - 60Hz
Voltage: 400V
Minimum speed: 500 rpm
Maximum speed: 1500 rpm
Representation with maximum speed

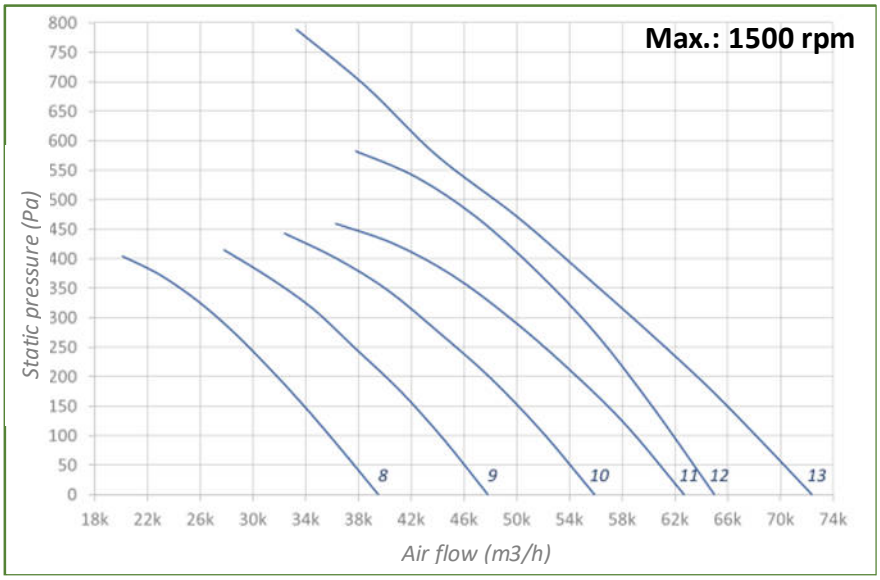

Curve No.	Ø mm	Power kW	Current A
8	1000	4.00	8.5
9	1000	5.50	11.6
10	1000	7.50	15.7
11	1000	9.20	20.5
12	1000	11.00	24.5
13	1250	11.00	24.5

Notes:

Frequency: 50Hz - 60Hz
Voltage: 400V
Minimum speed: 500 rpm
Maximum speed: 1500 rpm
Representation with maximum speed

A modular design to meet your specific requirements...

Casing with integrated inlet bellmouth...

with straight flange...

deported drive in a technical room, etc.

DA – WALL MOUNTED

Fixed speed

The DA fan is designed to be installed on a vertical surface. It has a square base with inlet bellmouth facilitating integration and assembly in industrial, agricultural or tertiary premises. Plastic or aluminium blades are available to cover your applications.

Standard construction:

- Housing in Z275 pre-galvanized steel
- Electrogalvanized safety guard on the motor

Option:

- Epoxy paint
- Stainless steel
- Operation in low or high temperature -40°C to +80°C
- Switch connector
- Shutter with louvres at the outlet, guard on the impeller side, e

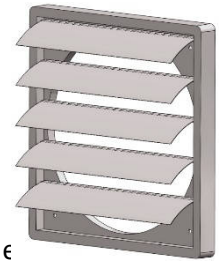

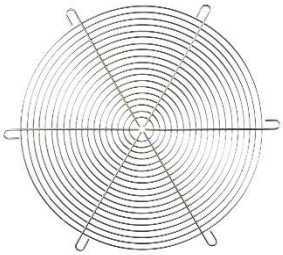

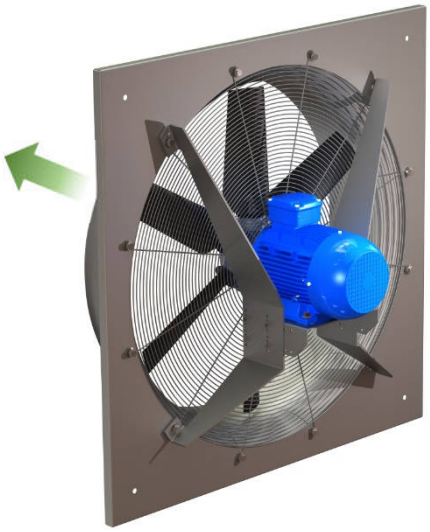

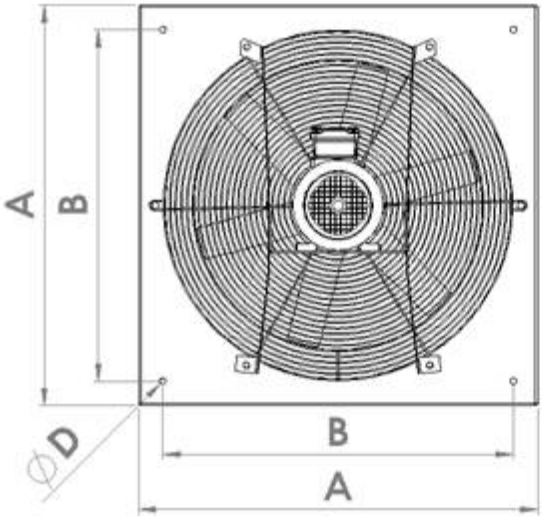

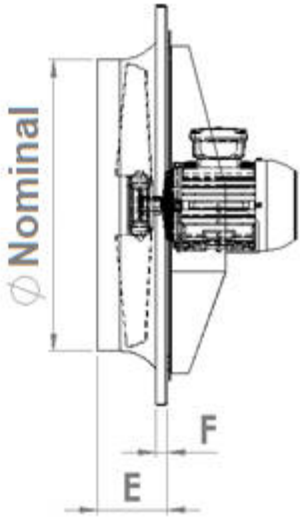

Nominal Ø mm	A mm	B mm	ØD mm	E mm	F mm
250	370	320	13	150	25
310	430	380	13	150	25
350	485	435	13	150	25
400	540	490	13	150	25
450	590	535	13	150	25
500	700	615	13	150	25
560	725	675	13	150	25
630	805	750	13	150	25
710	890	810	13	170	25
800	1050	910	13	210	25
900	1150	1010	13	210	25

Notes:

For diameters greater than 900mm, contact us.

DA EC – ELECTRONICALLY COMMUTATED

Variable speed

The DA EC is a wall-mounted electronically commutated (EC) axial fan. It is designed to extract air at ambient temperature. Easy to install, it is ideal to ventilate industrial or tertiary premises. Its permanent magnet motor with integrated electronic controller allows for versatile use to meet a variety of needs.

Characteristics:

- Up to 13,500m³/h
- Max. pressure 650Pa
- High yield IE5
- 0-10V control
- Temperature -20 to +45°C

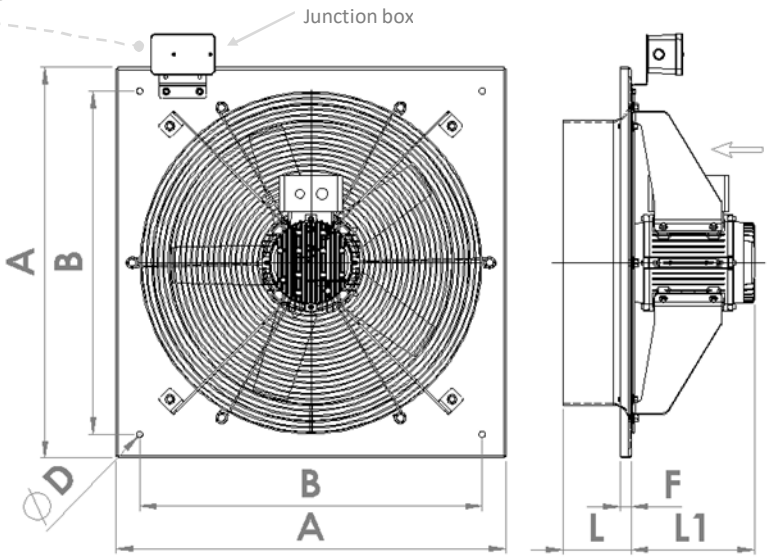

Available in 6 sizes and 11 models, the DA EC range proposes diameters from 250mm to 500mm covering a wide performance range (see "Operating range"). The motors are available for speeds from 500 to 1500 rpm or from 1000 to 3000 rpm.

Nominal Ø mm	Product code	Curve No.	P. ins kW	Max. V rpm	Max. I A	LwA dB	LpA dB	A mm	B mm	D mm	L mm	L1 mm	F mm	Weight kg
250	SX025B5PT2B10	1	0.40	3000	3.2	86	67	370	320	11	150	195	25	14
315	SX031B4PT2B15	2	0.80	3000	5.1	87	68	430	380	11	150	195	25	15
350	SX035D5PT4B10	7	0.20	1500	1.6	74	56	485	435	11	150	195	25	17
350	SX035B3PT2B15	3	0.80	3000	5.1	89	71	485	435	11	150	195	25	16
400	SX040D5PT4B15	8	0.40	1500	2.8	76	58	540	490	11	150	195	25	18
400	SX040D2PT2B30	4	1.50	3000	9.6	93	75	540	490	11	150	225	25	31
450	SX045D5PT4B20	9	0.55	1500	3.6	79	61	590	535	11	150	195	25	20
450	SX045D2PT2B35	5	2.20	3000	14.5	96	79	590	535	11	150	225	25	32
500	SX050B5PT4B20	10	0.55	1500	3.6	81	63	700	615	11	150	195	25	22
500	SX050D5PT4B30	11	0.75	1500	4.8	82	64	700	615	11	150	225	25	35
500	SX050E2PT2B35	6	2.20	3000	14.5	92	75	700	615	11	150	225	25	35

P. ins = installed power
Max. V = maximum velocity
Max. I = maximum current
LwA = acoustic power
LpA = acoustic pressure at 3m (1/2 spherical)
Curve No., see operating range
LwA and LpA are indicated for maximum speeds

Variable speed from 1000 to 3000 rpm:

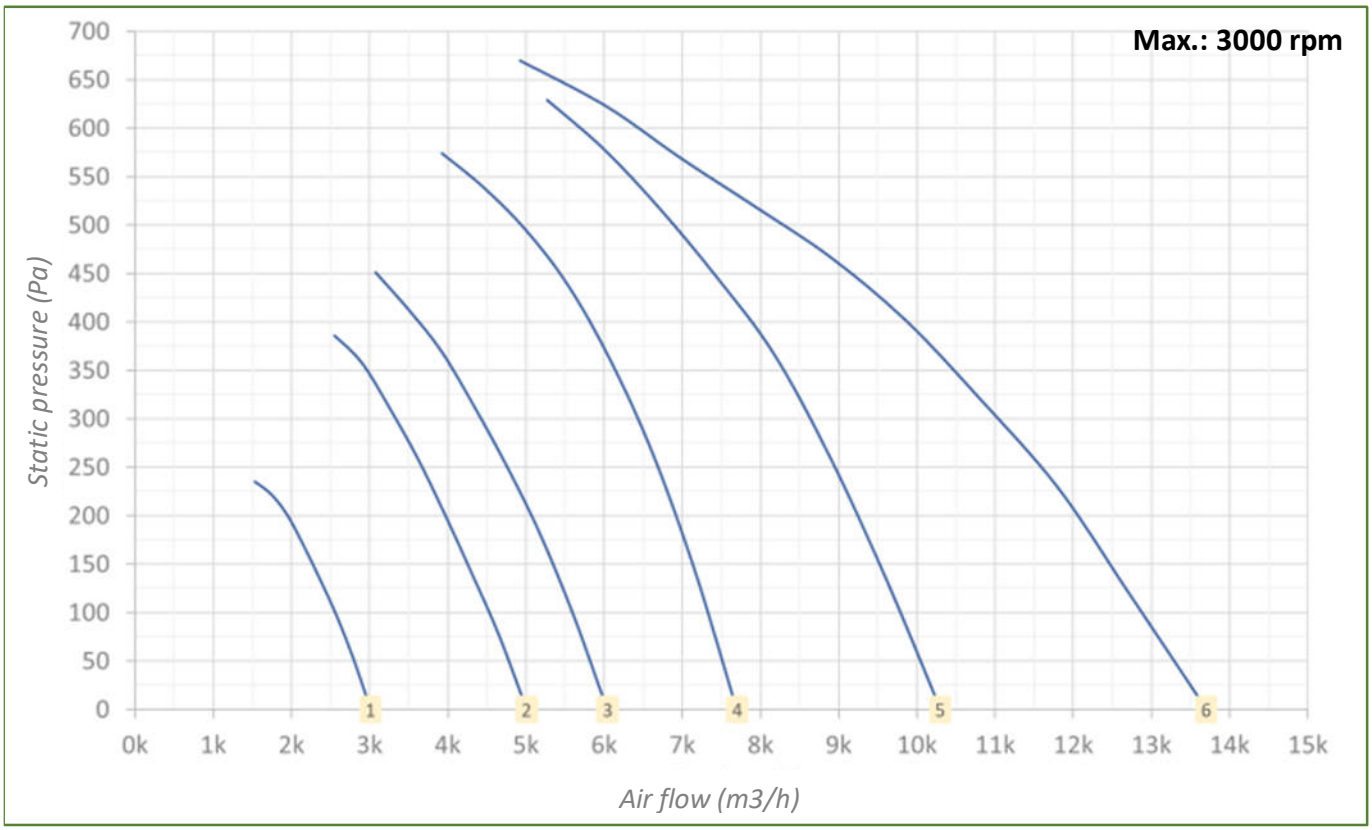

Variable speed from 500 to 1500 rpm:

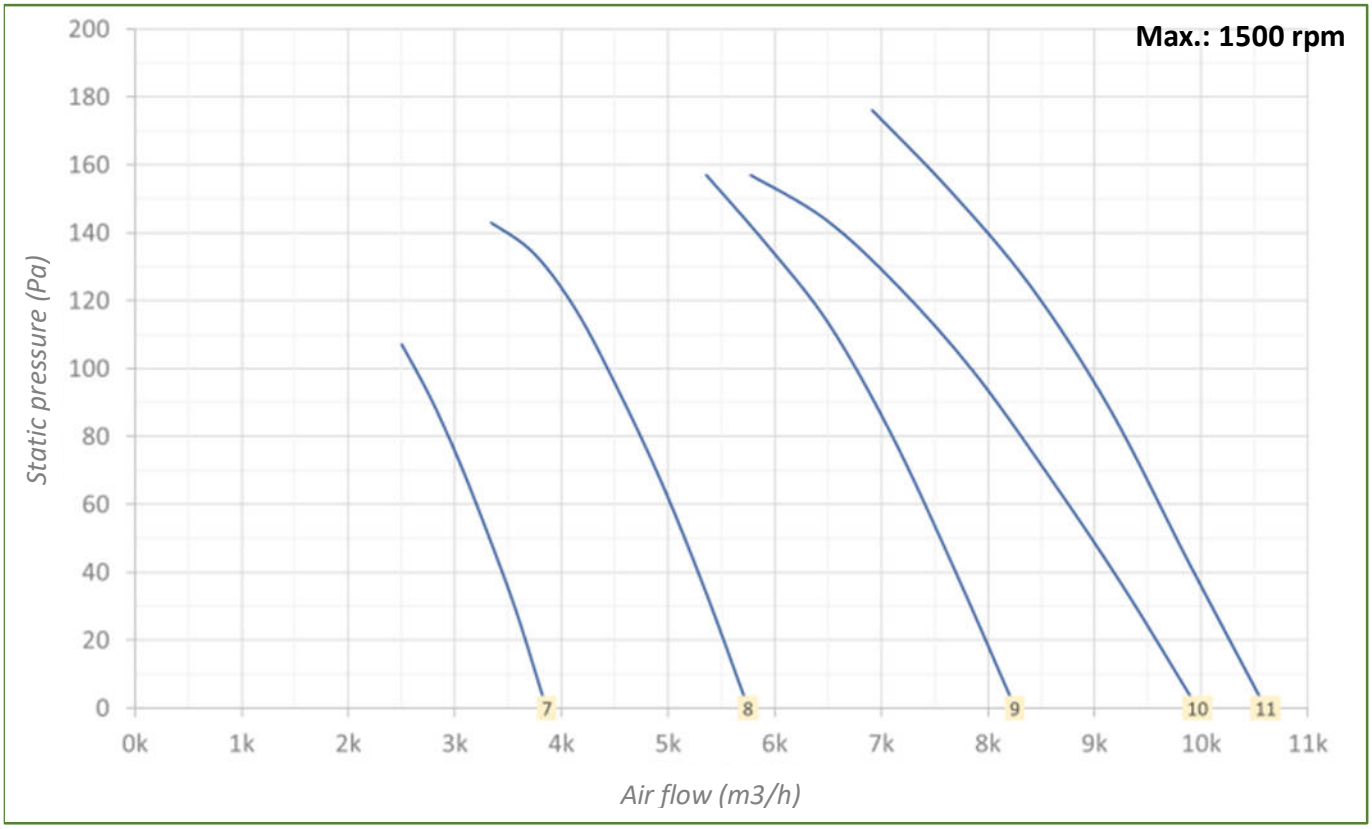

EX – BELT DRIVE AXIAL

Belt drive

To meet specific needs where the motor has to be outside the air flow, we propose our range of belt-driven fans which, by using our range of impellers, can cover a wide scope of performances.

The combination of the casing diameter, the installed power and the drive ratios will be defined depending on your different constraints, available space, power, sound level, etc.

Standard construction:

- Housing in Z275 pre-galvanized steel
- Pre-selection of bearings and standard belt -20° to +80°C

Option:

- Sealed bearing, sealed for life or with grease fitting
- Bearing with grease fittings for use at a maximum of 130°C
- Hot-dip stainless steel (304L, 306L)
- Epoxy paint

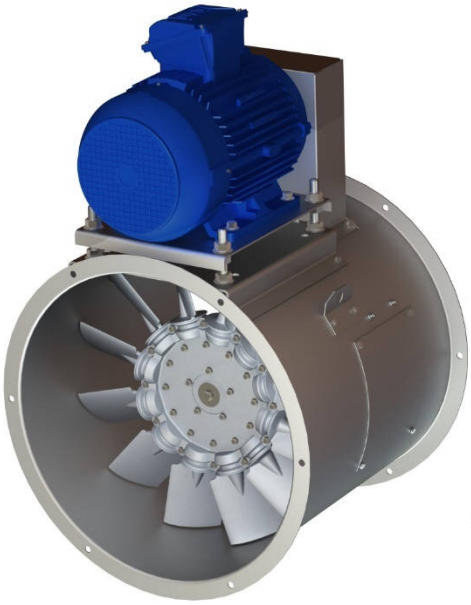

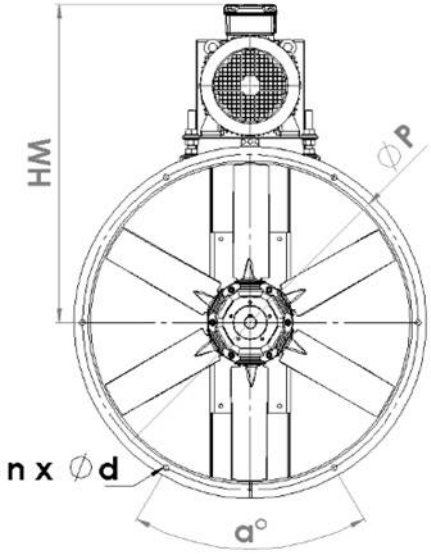

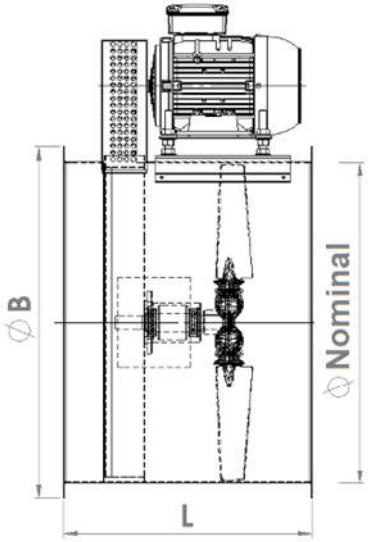

Nominal Ø mm	B mm	n -	α °	d mm	P mm	L mm	HM mm	Weight* kg
400	470	6	60	12	440	500	550	44
450	520	6	60	12	490	500	550	62
500	572	6	60	12	540	550	600	88
560	626	6	60	12	594	550	600	108
630	704	6	60	12	670	550	670	135
710	780	6	60	12	744	550	750	138
800	885	8	45	12	850	550	850	142
900	990	12	30	15	954	690	900	203
1000	1090	12	30	15	1056	690	1010	324
1120	1230	12	30	15	1190	800	1105	550
1250	1375	12	30	15	1320	800	1170	729

Notes:

*Weights are provided for information only and include the motor weights of the maximum power (without ancillaries).
For diameters greater than 1250mm, contact us.

TH / TV – ROOF FANS WITH H. / V. DISCHARGE

Roof mounting

This range is available from diameter 315 to 1250. The TH (horizontal) and TV (vertical) ranges are suitable for roof installations. They can extract large volumes of fluids without particulate matter. The manufacturing characteristics of these products are comparable with axial fans in the same operating class. For installation in an area with particular temperature or climate conditions (snow, wind, etc.), please ask us. This solution (TV) is particularly suitable for environmental constraints with an upwards discharge of any VOC (Volatile Organic Compounds) that may be contained in the fluids. **For optimal installation, we recommend the option with connection to a switch or external junction box for these fans.**

Standard construction:

- Fan in pre-galvanized steel
- Standard fastening base plate. Specific dimensions and drill holes upon request.
- Protective polyester cover for TH and in pre-galvanized steel for TV.

Option:

- Aluminium
- Hot-dip galvanized steel or 304L / 316L stainless steel
- Exterior epoxy paint finish
- Ancillaries: outlet backdraught dampers, silencer at the inlet, deflectors, etc.

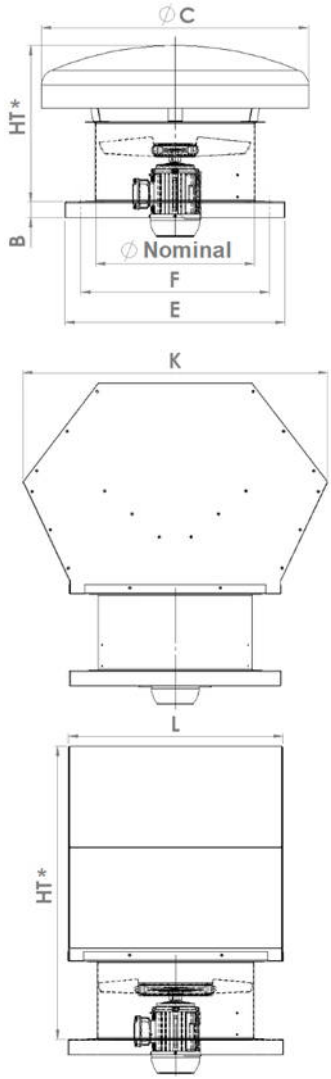

Nominal Ø mm	B mm	ØC mm	E mm	F mm	ØG mm	K mm	L mm	HT* TH mm	HT* TV mm
315	50	650	500	400	13	800	500	450	820
350	50	650	500	400	13	800	500	450	820
400	50	650	600	500	13	800	600	450	860
450	50	800	600	500	13	800	600	470	860
500	50	800	700	600	13	1000	700	660	1120
560	50	800	700	600	13	1000	700	660	1120
630	50	1200	800	700	13	1100	800	830	1180
710	50	1200	900	800	13	1100	800	830	1180
800	50	1500	1000	900	13	1300	1100	920	1400
900	50	1500	1100	1000	13	1300	1100	880	1230
1000	65	1500	1200	1100	13	1400	1200	1050	1460
1120	65	2000	1370	1270	13	1700	1400	1340	1550
1250	65	2000	1370	1270	13	1700	1400	1320	1590

Notes:
HT*: Maximum height with short casing, without ancillaries.
The dimensions B, V, E and F are the same for TH and TV

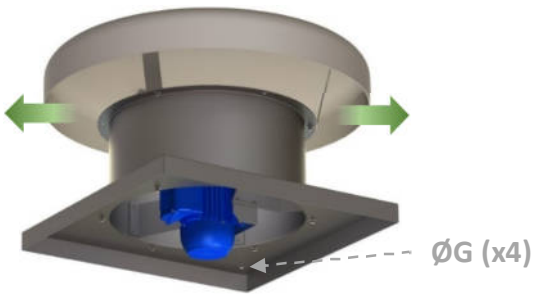

TH

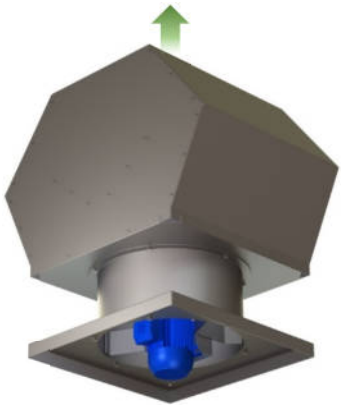

TV

Complete sealing cannot, however, be guaranteed in the event of rain or unusual climate events and the installation must be carried out in compliance with best practice (point to be defined for all roof fans, notion of maximum slope).

GENERAL VENTILATION – CENTRIFUGALS

DESCRIPTION

We have a range from diameter 250mm to 1400mm, from a few hundred m3/h to 250,000m3/h, with motors with 2, 4 and 6 poles, 1 or 2 speeds. Our fans might also be suitable for use in geographic areas with specific electricity networks, i.e. 60 Hz.
Other motor speeds are available on request.

APPLICATION

Air extraction or blowing in an ambient environment:

- Car parks and high-rise buildings
- Hospitals
- Stations and airports
- Hypermarkets
- Canteens
- Workshops

More generally, establishments open to the public or employees.

FLUID TEMPERATURE

The standard operating temperatures are from -20°C to +40°C with a class F motor.
On request, fans fitted with a class H motor can operate in environments up to +130°C.

CONSTRUCTION

Our fans are made in our factory, with pre-galvanized steel as standard or Fe360 steel. To meet your particular requirements, we can manufacture upon request:

- 304L or 316L stainless steel
- Hot-dip galvanized steel
- RAL5010 polyester coating

Solutions with EC motors are available in direct-drive or belt-drive. Please ask us.

- ✓ ***Single-inlet***
- ✓ ***Double-inlet***
- ✓ ***Plastic impeller***
- ✓ ***Inline centrifugal: VGN***
- ✓ ***Roof fan: TCH -TCV - TCO - TVCP***

ANCILLARIES

In line with your requirements, we have safety guards, support feet, rigid coupling flanges, outlet backdraught dampers, on-off switch connectors, etc. to simplify your installation. See **ANCILLARIES tab** for more information.

OPTION

We can wire motors, switch connectors, make special productions, etc. and study your requirements to meet your specifications and constraints.

Reminder: All conventional and normative elements are presented in the **STANDARDS-RULES-CONVENTIONS** tab. All ancillaries are presented in the **ANCILLARIES** tab at the end of the catalog. Please contact the sales team for your specific requirements.

CA SERIE – FORWARD CURVED BLADES

Common operating range

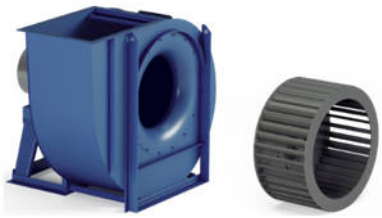

- **FLOW RATE (m^3/h)**

Low		Medium		High	
700	*20000*	*30000*	*80000*	*X*	*X*

- **TOTAL PRESSURE (Pa)**

Low		Medium		High	
245	*2800*	*X*	*X*	*X*	*X*

Recommended

To avoid

- **APPLICATION**

	Industry	General	Chemical	Process	Other
Domain	*Medium flow Low pressure*	*Medium flow Low pressure*	*X*	*Medium flow Low pressure*	*Consult us*

	Clean	Medium	High
Dust level	*Air, steam*	*X*	*X*

	Low	Medium	High
Solid matter	*X*	*X*	*X*

	Low	Medium	High
Filamentary material	*X*	*X*	*X*

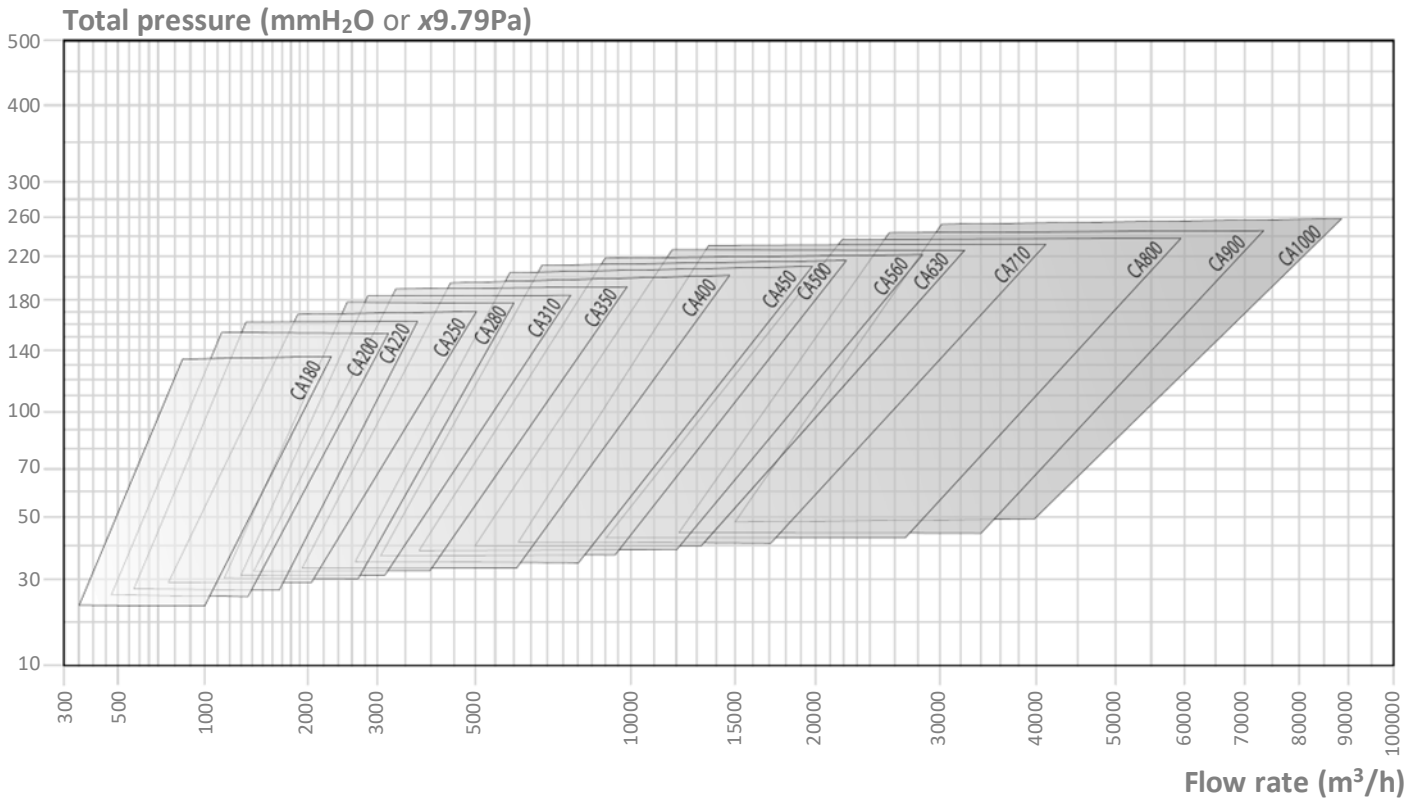

CA DIMENSIONS

General dimensions

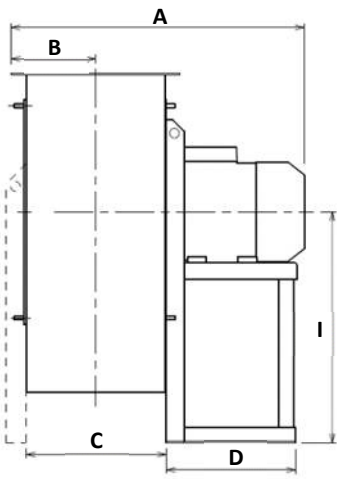

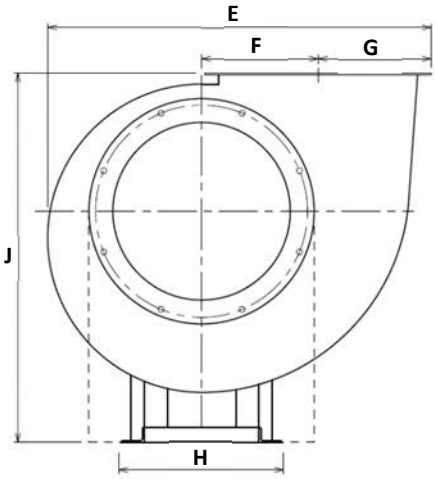

CA...	No. of poles	HA* mm	Inst. P kW	Mot. V rpm	Weight ** kg	A*** mm	B mm	C mm	D mm	E mm	F mm	G mm	H mm	I mm	J mm
CA220	/4	71	0.37	1370	28	414	118	172	196	481	135	151	225	300	480
CA250	/4	80	0.55	1395	33	458	128	192	217	525	149	164	225	315	510
CA280	/4	90	1.10	1415	42	529	143	210	251	586	172	184	260	375	575
CA310	/4	100	2.20	1420	58	584	155	234	283	653	196	201	324	400	625
CA350	/4	112	4.00	1460	76	632	168	262	286	725	216	221	324	450	705
CA400	/4	132	7.50	1460	108	704	184	294	345	798	245	242	372	500	785
CA450	/4	160	15.00	1470	170	844	201	330	446	895	275	267	440	560	880
CA500	/4	180	22.00	1470	272	1016	221	370	470	997	303	294	488	600	960
CA560	/4	225	37.00	1470	497	1111	252	414	539	1151	332	335	616	670	1070
CA310	/6	80	0.55	935	44	506	155	234	217	653	196	201	225	400	625
CA350	/6	90	1.10	935	59	580	168	262	251	725	216	221	260	450	705
CA400	/6	100	1.50	950	82	643	184	294	283	798	245	242	324	500	785
CA400	/6	112	2.20	950	90	664	184	294	285	798	245	242	324	500	785
CA450	/6	132	3.00	960	112	739	201	330	345	895	275	267	372	560	880
CA500	/6	132	5.00	965	153	779	221	370	345	997	303	294	372	600	960
CA560	/6	160	7.50	970	221	940	252	414	440	1151	332	335	440	670	1070
CA630	/6	200	18.50	980	400	1179	277	464	508	1282	373	369	568	750	1200
CA710	/6	250	37.00	980	670	1384	304	508	600	1402	427	408	826	670	1170
CA800	/6	280	55.00	980	958	1449	345	570	690	1590	478	461	926	755	1315
CA200	/2	90	2.20	2920	33	466	109	152	251	435	120	139	260	265	430
CA220	/2	100	3.00	2950	41	516	118	172	283	481	135	151	324	300	480
CA250	/2	112	4.00	2950	60	557	128	192	276	525	149	164	324	315	510
CA280	/2	132	5.50	2950	82	621	143	210	344	586	172	184	372	375	575

Notes:

(*) HA is the motor frame size.

(**) Due to multiple sourcing of motors, there may be weight differences (motor in cast iron or aluminium, single-speed or dual-speed, etc.)

(***) A is variable depending on the motorization.

For diameters greater than 800mm, contact us.

RL SERIE – BACKWARD CURVED BLADES

Common operating range

- **FLOW RATE (m^3/h)**

Low		Medium		High	
X	X	1000	60000	120000	250000

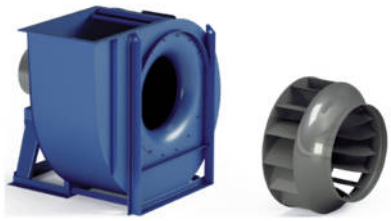

- **TOTAL PRESSURE (Pa)**

Low		Medium		High	
200	4500	X	X	X	X

Recommended

To avoid

- **APPLICATION**

	Industry	General	Chemical	Process	Other
Domain	*Packaging Storage*	*High flow Low pressure*	*High flow Low pressure*	*High flow Low pressure*	*Consult us*

	Clean	Medium	High
Dust level	*Air, steam*	*Air, steam*	X

	Low	Medium	High
Solid matter	X	X	X

	Low	Medium	High
Filamentary material	X	X	X

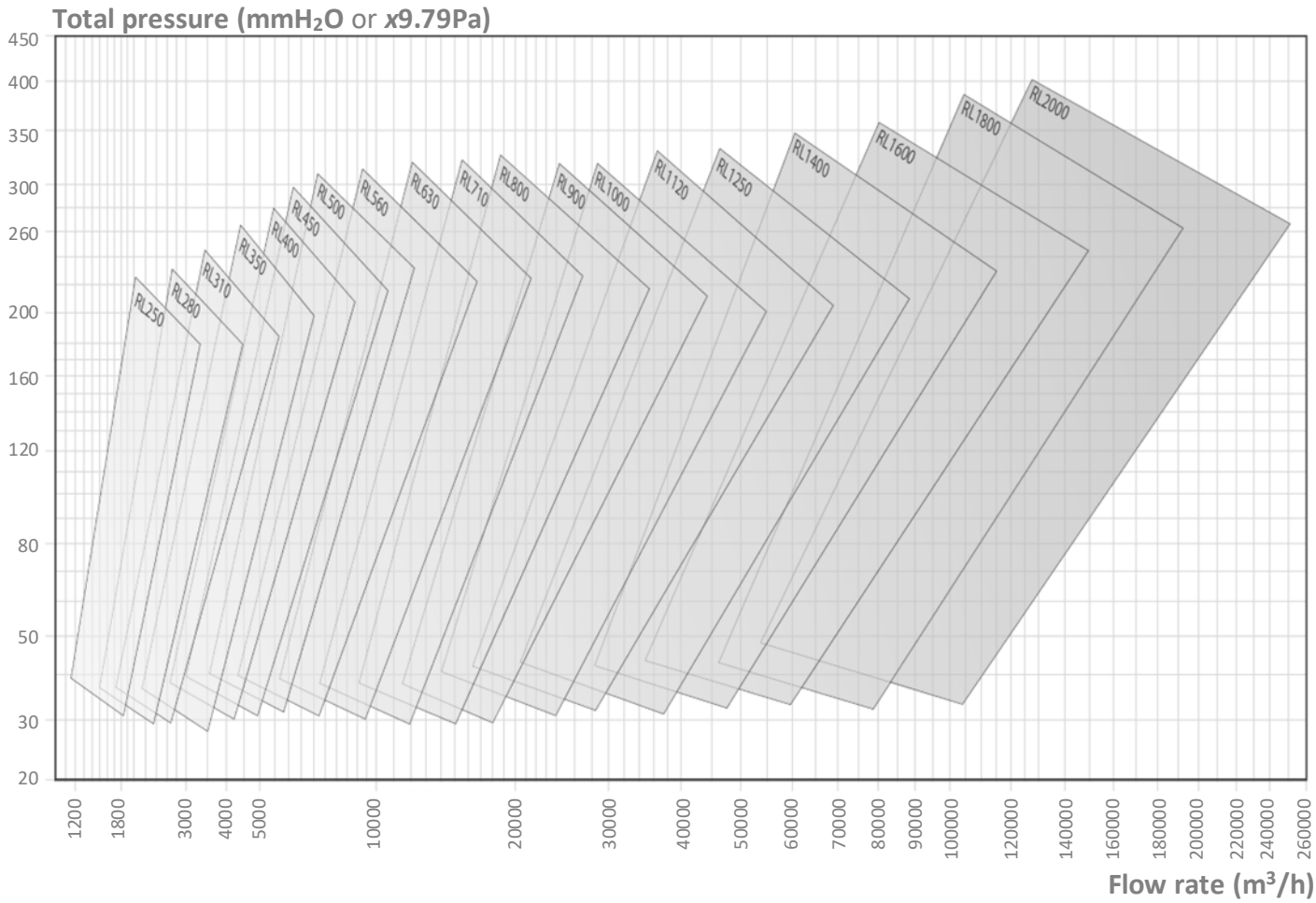

RL DIMENSIONS

General dimensions

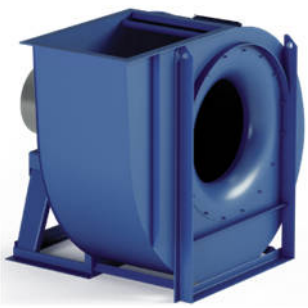

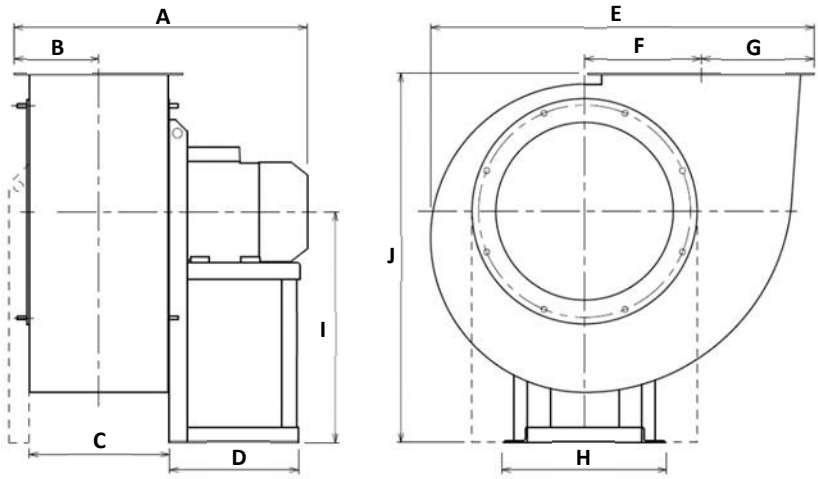

RL...	No. of poles	HA* mm	Inst. P kW	Mot. V rpm	Weight ** kg	A*** mm	B mm	C mm	D mm	E mm	F mm	G mm	H mm	I mm	J mm
RL310	/4	63	0.18	1350	43	452	155	234	151	653	196	201	206	400	625
RL350	/4	71	0.37	1370	65	509	169	262	195	725	216	221	225	450	705
RL400	/4	80	0.75	1400	75	565	184	294	217	798	245	242	225	500	785
RL450	/4	90	1.10	1415	94	647	202	330	251	895	275	267	260	560	880
RL500	/4	100	2.20	1440	130	718	221	370	285	997	303	294	324	600	960
RL560	/4	112	4.00	1450	158	795	253	414	280	1151	332	335	324	670	1070
RL630	/4R	132	5.50	1455	202	885	277	464	340	1282	373	369	372	750	1200
RL630	/4	132	7.50	1455	214	885	277	464	340	1282	373	369	372	750	1200
RL710	/4R	132	11.00	1460	315	1045	304	508	439	1402	427	408	826	850	1350
RL710	/4	160	15.00	1460	326	1045	304	508	439	1402	427	408	826	850	1350
RL800	/4R	180	18.50	1460	465	1188	345	570	463	1590	478	461	926	950	1510
RL800	/4	180	22.00	1460	484	1239	345	570	463	1590	478	461	926	950	1510
RL900	/4R	225	37.00	1470	840	1367	379	638	540	1770	538	509	1026	850	1480
RL900	/4	225	45.00	1470	847	1427	379	638	540	1770	538	509	1026	850	1480
RL1000	/4R	250	55.00	1475	1105	1632	418	716	600	1985	607	564	1128	950	1660
RL1000	/4	280	75.00	1480	1278	1635	418	716	690	1985	607	564	1128	950	1660
RL500	/6	80	0.55	930	117	640	221	370	217	997	303	294	225	600	960
RL560	/6	90	1.10	930	145	743	253	414	247	1151	332	335	260	670	1070
RL630	/6	112	2.20	950	180	845	277	464	280	1282	373	369	324	750	1200
RL710	/6	132	4.00	960	286	940	304	508	336	1402	427	408	826	850	1350
RL800	/6R	132	5.50	960	367	1002	345	570	336	1590	478	461	926	950	1510
RL800	/6	160	7.50	960	397	1107	345	570	439	1590	478	461	926	950	1510
RL900	/6R	160	11.00	970	556	1196	379	638	436	1770	538	509	1026	850	1480
RL900	/6	180	15.00	970	658	1328	379	638	460	1770	538	509	1026	850	1480
RL1000	/6R	200	18.50	975	879	1482	418	716	500	1985	607	564	1128	950	1660
RL1000	/6	200	22.00	975	885	1482	418	716	500	1985	607	564	1128	950	1660
RL1120	/6R	225	30.00	975	1153	1611	471	802	540	2251	684	635	1268	1060	1860
RL1120	/6	250	37.00	980	1242	1719	471	802	600	2251	684	635	1268	1060	1860
RL1250	/6R	280	55.00	985	1739	1818	520	898	690	2521	770	704	1400	1190	2090
RL1250	/6	315	75.00	985	1980	2030	520	898	800	2521	770	704	1400	1190	2090
RL1400	/6R	315	90.00	985	2630	2330	574	1008	800	2770	854	781	1560	1320	2320
RL1400	/6	315	110.00	985	2651	2330	574	1008	800	2770	854	781	1560	1320	2320
RL250	/2	71	0.55	2850	37	464	128	192	196	525	149	164	225	315	510
RL280	/2	80	1.10	2850	45	482	143	210	217	586	172	184	225	375	575
RL310	/2	90	2.20	2880	57	553	155	234	251	653	196	201	260	400	625
RL350	/2	100	3.00	2890	80	611	169	262	285	725	216	221	324	450	705
RL400	/2R	112	4.00	2950	95	664	184	294	285	798	245	242	324	500	785
RL400	/2	132	5.50	2950	116	710	184	294	345	798	245	242	372	500	785
RL450	/2R	132	7.50	2950	124	751	202	330	345	895	275	267	372	560	880
RL450	/2	160	11.00	2955	161	860	202	330	446	895	275	267	440	560	880
RL500	/2R	160	15.00	2960	187	913	221	370	446	997	303	294	440	600	960
RL500	/2	160	18.50	2960	196	913	221	370	446	997	303	294	440	600	960

Notes:

(*) HA is the motor frame size.

(**) Due to multiple sourcing of motors, there may be weight differences (motor in cast iron or aluminium, single-speed or dual-speed, etc.)

(***) A is variable depending on the motorization.

For diameters greater than 1400mm, contact us.

RM SERIE – BACKWARD CURVED BLADES

Common use ranges

- **FLOW RATE (m^3/h)**

Low		Medium		High	
360	*10000*	*15000*	*60000*	*80000*	*180000*

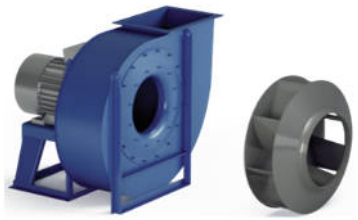

- **TOTAL PRESSURE (Pa)**

Low		Medium		High	
500	*1000*	*2000*	*5500*	*X*	*X*

Recommended

To avoid

- **APPLICATION**

	Industry	General	Chemical	Process	Other
Domain	*High flow Medium pressure*	*High flow Medium pressure*	*High flow Medium pressure*	*High flow Medium pressure*	*Consult us*

	Clean	Medium	High
Dust level	*Air, steam*	*Air, steam*	*Air, steam*

	Low	Medium	High
Solid matter	*Saw dust, wood shavings, pellets*	*Saw dust, wood shavings, pellets*	*X*

	Low	Medium	High
Filamentary material	*X*	*X*	*X*

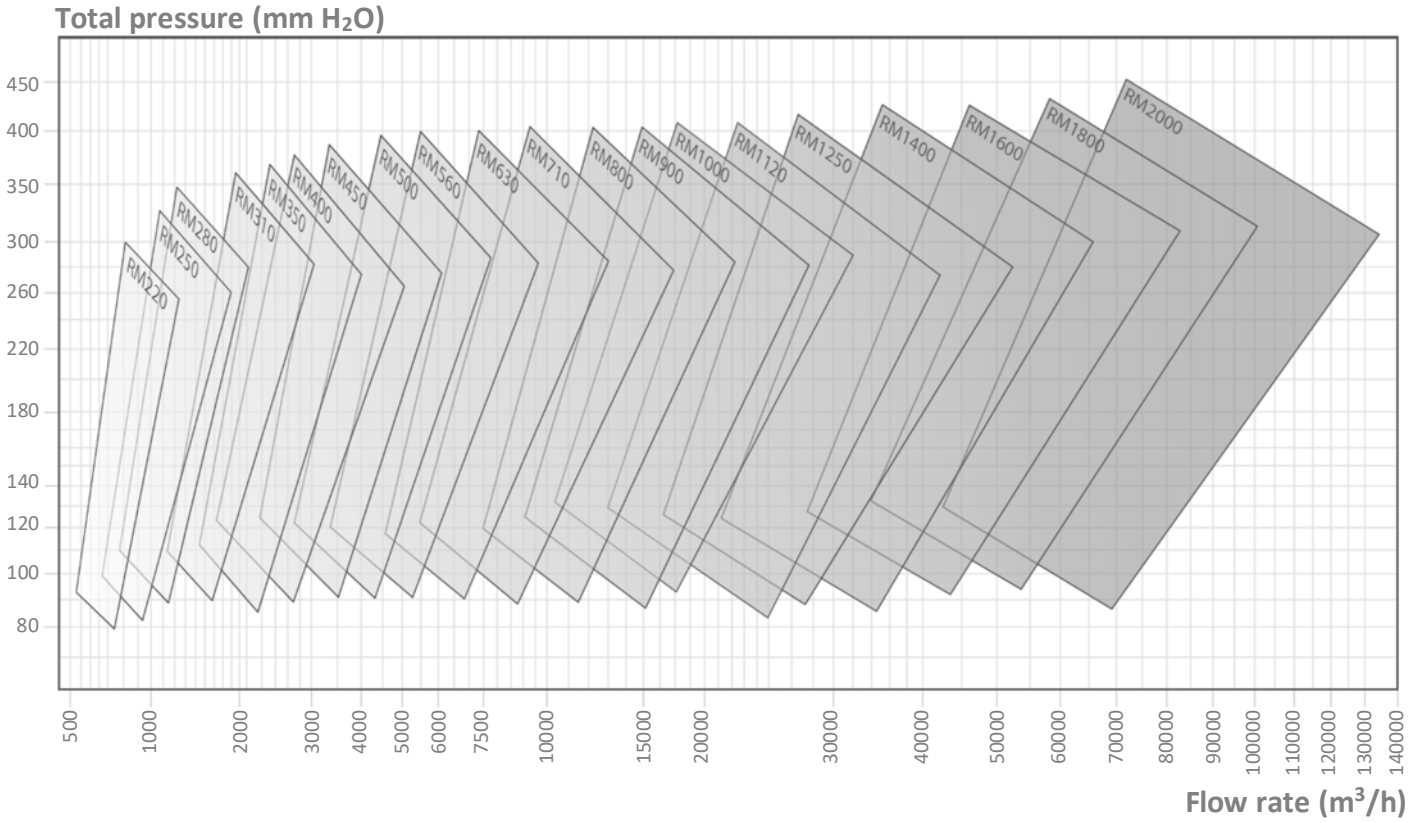

RM DIMENSIONS

General dimensions

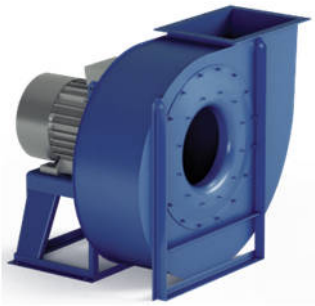

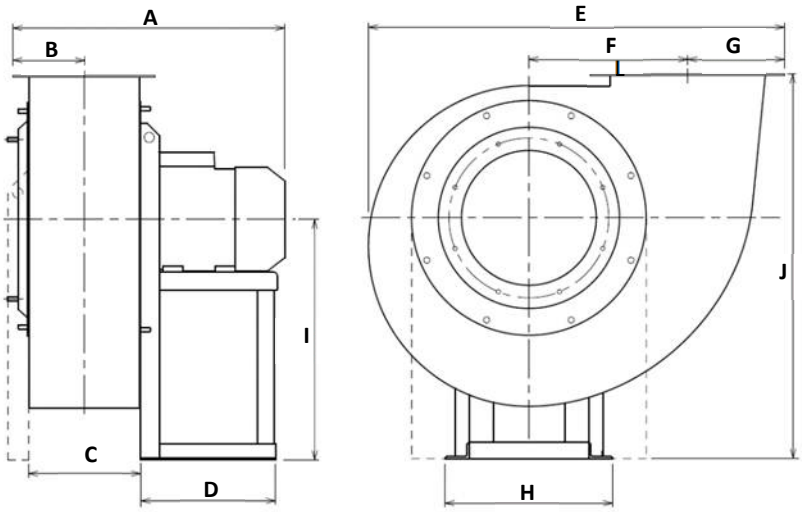

RM...	No. of poles	HA* mm	Inst. P kW	Mot. V rpm	Weight ** kg	A*** mm	B mm	C mm	D mm	E mm	F mm	G mm	H mm	I mm	J mm
RM500	/4	90	1.50	1420	106	613	184	296	251	997	355	242	260	600	960
RM560	/4	100	3.00	1420	136	691	202	330	281	1141	390	267	324	670	1070
RM630	/4R	112	4.00	1440	190	752	221	370	281	1282	439	294	324	750	1200
RM630	/4	132	5.50	1460	205	792	221	370	341	1282	439	294	372	750	1200
RM710	/4R	132	7.50	1460	287	837	253	404	336	1399	500	335	826	670	1170
RM710	/4	160	11.00	1460	338	942	253	404	436	1399	500	335	826	670	1170
RM800	/4R	160	15.00	1460	504	1011	277	452	436	1570	560	369	926	755	1315
RM800	/4	180	18.50	1460	512	1092	277	452	460	1570	560	369	926	755	1315
RM900	/4R	200	30.00	1465	684	1254	304	506	500	1758	630	408	1026	850	1480
RM900	/4	225	37.00	1470	767	1236	304	506	540	1758	630	408	1026	850	1480
RM1000	/4R	225	45.00	1470	963	1378	345	568	540	1984	710	461	1128	950	1660
RM1000	/4	250	55.00	1485	1081	1486	345	568	600	1984	710	461	1128	950	1660
RM1120	/4R	280	75.00	1490	1445	1558	379	638	690	2241	800	509	1268	1060	1860
RM1120	/4	280	90.00	1490	1486	1558	379	638	690	2241	800	509	1268	1060	1860
RM800	/6R	132	4.00	955	391	906	277	452	336	1570	560	369	926	755	1315
RM800	/6	132	5.50	960	395	906	277	452	336	1570	560	369	926	755	1315
RM900	/6R	160	7.50	970	511	1065	304	506	436	1758	630	408	1026	850	1480
RM900	/6	160	11.00	970	531	1065	304	506	436	1758	630	408	1026	850	1480
RM1000	/6R	180	15.00	980	743	1279	345	568	460	1984	710	461	1128	950	1660
RM1000	/6	200	18.50	985	850	1336	345	568	500	1984	710	461	1128	950	1660
RM1120	/6R	200	22.00	985	955	1405	379	638	500	2241	800	509	1268	1060	1860
RM1120	/6	225	30.00	985	1156	1447	379	638	540	2241	800	509	1268	1060	1860
RM1250	/6R	250	37.00	990	1430	1632	418	716	600	2511	900	564	1400	1190	2090
RM1250	/6	280	45.00	990	1915	1635	418	716	690	2511	900	564	1400	1190	2090
RM1400	/6R	280	55.00	990	1850	1751	471	802	690	2780	1000	635	1560	1320	2320
RM1400	/6	315	75.00	995	2366	1963	471	802	800	2780	1000	635	1560	1320	2320
RM250	/2	71	0.37	2820	26	396	110	154	195	525	175	139	225	315	510
RM280	/2	80	0.75	2850	35	438	119	172	217	583	202	151	225	375	575
RM310	/2	90	1.50	2920	45	505	128	192	251	649	229	164	260	400	625
RM350	/2	90	2.20	2920	70	530	143	212	251	725	253	184	260	450	705
RM400	/2	112	4.00	2940	93	606	155	236	285	798	286	201	324	500	785
RM450	/2R	132	5.50	2940	115	673	169	264	345	895	321	221	372	560	880
RM450	/2	132	7.50	2940	118	673	169	264	345	895	321	221	372	560	880
RM500	/2R	160	11.00	2950	175	810	184	296	446	997	355	242	440	600	960
RM500	/2	160	15.00	2950	180	810	184	296	446	997	355	242	440	600	960
RM560	/2R	180	18.50	2960	220	857	202	330	441	1141	390	267	440	670	1070
RM560	/2	180	22.00	2960	276	938	202	330	465	1141	390	267	488	670	1070

Notes:

(*) HA is the motor frame size.

(**) Due to multiple sourcing of motors, there may be weight differences (motor in cast iron or aluminium, single-speed or dual-speed, etc.)

(***) A is variable depending on the motorization.

For diameters greater than 1400mm, contact us.

RL / RM EC SERIE – ELECTRONICALLY COMMUTATED

EC Integrated and Deported

For RL and RM models, a version with EC motorization is available. The combination of electronic management and a permanent magnet motor promotes energy savings by reducing electricity consumption. The acoustic level is also optimized for surrounding comfort.

AREM EC centrifugal fans are designed for simple use (integrated EC). Available in expert mode for complete management with programmable automatons via Modbus communication and protocols (external EC).

Characteristics:

- Diameter from 250 to 630mm
- EC solutions with integrated or external EC
- Electronic management and communication via ModBus RS485
- Motor speed variation with 0-10V input signal
- Fast connection terminal blocks

EC Integrated

- ✓ Drive integrated in the motor
- ✓ Off / On: contact 1 or 0
- ✓ Speed feedback signal: 3 pulses/rev
- ✓ Motor fault code via Modbus
- ✓ Modbus connection: terminals
- ✓ Temperature: from -20 à 45°C

EC Deported

- ✓ Drive attached to the casing
- ✓ On / Off: 1V input signal detection
- ✓ Speed feedback signal: 1 pulse/rev
- ✓ Motor fault code via Modbus
- ✓ Modbus connection: terminal blocks or RJ12 plug
- ✓ Temperature: from -40 à 45°C
- ✓ 2x digital inputs: terminal blocks
  - On / Off
  - Default reset
  - Booster mode (full motor speed)
- ✓ 1x digital output: terminal blocks
  - Tachymeter
  - In operation LED indicator
  - Fault LED indicator

Factory settings:

- In the external EC version, the inputs and outputs are not configured by default.

Different solutions are proposed to meet specific requests. Based on the standard range, we can build tailor-made products to satisfy your specific applications.

RL EC PERFORMANCES

Common operating range

RM...	HA mm	Inst. P kW	Current A	Voltage V (50/60Hz)	Motor V. min. rpm	Motor V. max. rpm
RL350	71	0.40	2.8	1x 230/280V	700	1460
RL450	90	1.10	7.0	1x 230/280V	700	1460
RL500	100	2.20	5.1	3x 400/440V	700	1460
RL560R	100	3.00	6.4	3x 400/440V	700	1460
RL630R	132	5.00	11.6	3x 400/440V	700	1460
RL630	132	7.50	15.7	3x 400/440V	700	1460
RL250	71	0.80	4.8	1x 230/280V	1400	2960
RL310	90	2.20	14.0	1x 230/280V	1400	2960
RL350	100	3.00	6.4	3x 400/440V	1400	2960
RL400	132	5.50	11.6	3x 400/440V	1400	2960
RL450R	132	7.50	15.7	3x 400/440V	1400	2960

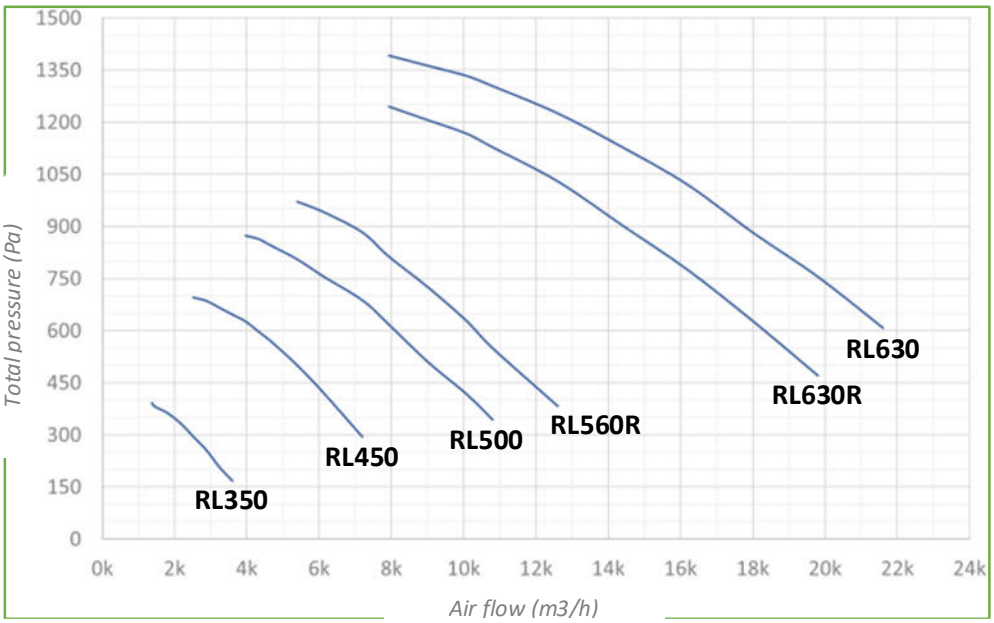

Variable from 700 to 1460

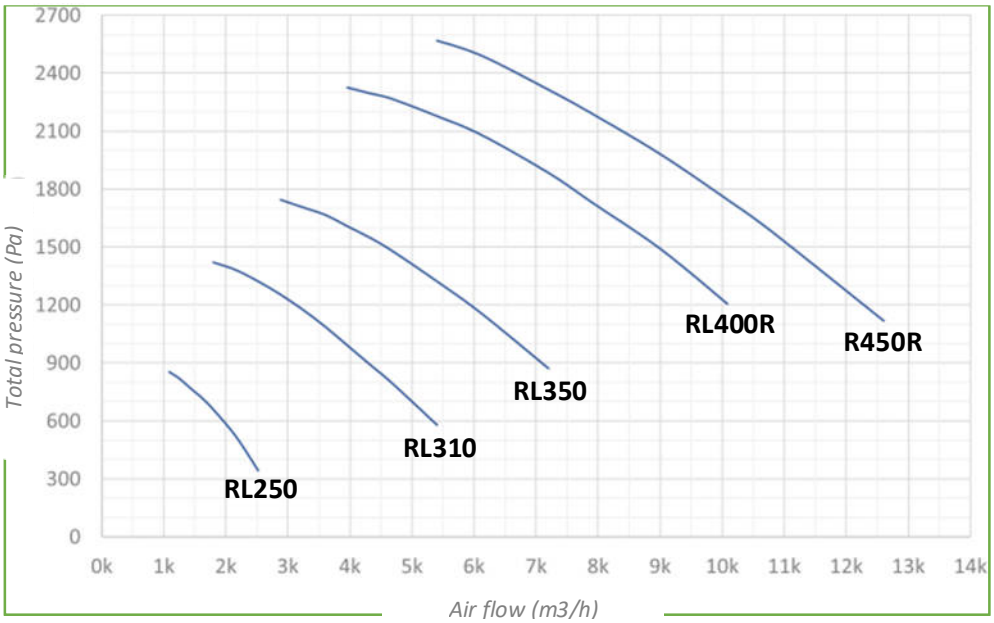

Variable from 1400 to 2960

RM EC PERFORMANCES

Common operating range

RM...	HA mm	Inst. P kW	Current A	Voltage V (50/60Hz)	Motor V. min. rpm	Motor V. max. rpm
RM500R	71	0.40	2.8	1x 230/280V	700	1460
RM560R	90	1.10	7.0	1x 230/280V	700	1460
RM630*	100	2.20	5.1	3x 400/440V	700	1460
RM630	100	3.00	6.4	3x 400/440V	700	1460
RM250	71	0.80	4.8	1x 230/280V	1400	2960
RM310	90	2.20	14.0	1x 230/280V	1400	2960
RM350	100	3.00	6.4	3x 400/440V	1400	2960
RM400R	132	5.50	11.6	3x 400/440V	1400	2960
RM450R	132	7.50	15.7	3x 400/440V	1400	2960

RM630* is identical to RM630.
The installed power is less with a maximum speed of rotation of 1340 rpm.

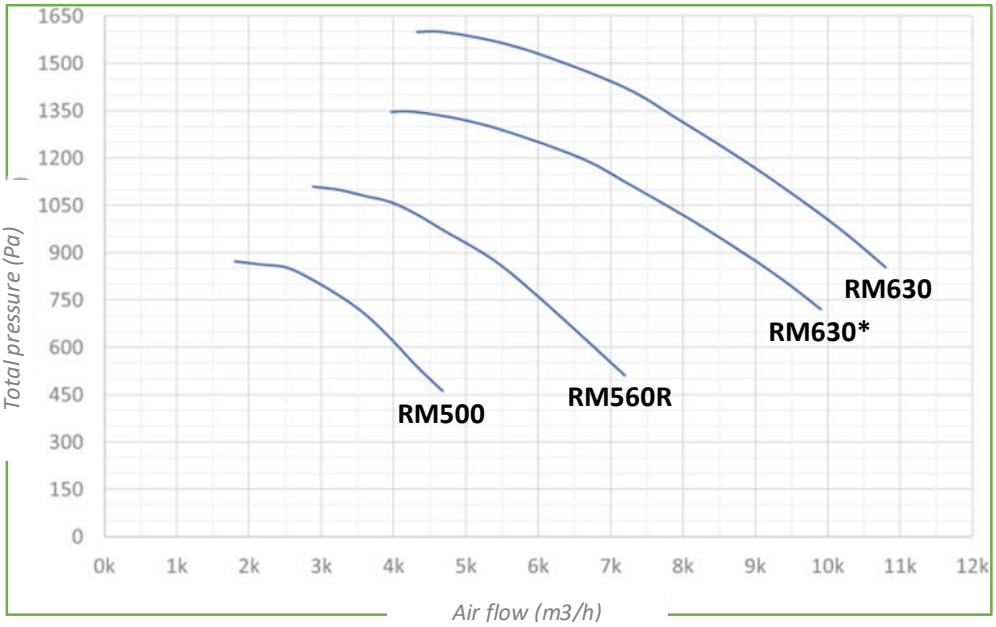

Variable from 700 to 1460

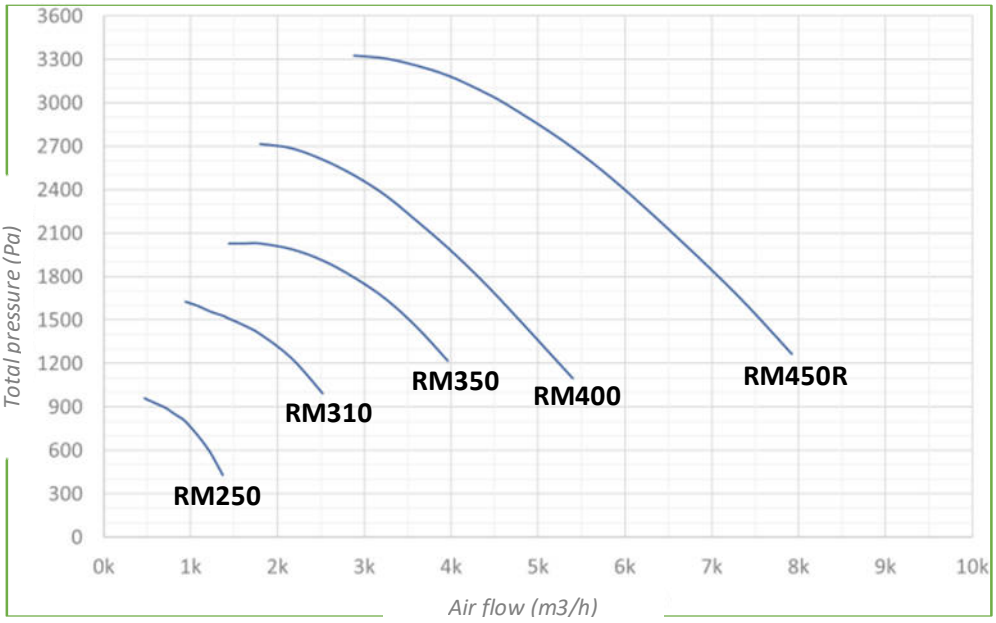

Variable from 1400 to 2960

RDH – BACKWARD CURVED BLADES: DOUBLE INLET

Belt drive

The centrifugal fans with double inlet are fitted with a belt drive and backwards inclined blades. They are designed to convey high flow rates at medium pressures and allow clean air to be transported at a maximum temperature of +40°C.

Standard construction:

- Casing in pre-galvanized sheet
- Frame in painted steel
- Transmission line keyed on both sides
- Self-aligned, sealed and greased for life bearings

Option:

- Epoxy paint finish
- Operation at low temperature -30°C
- Frame installation (for large motorizations)
- Mounting in series

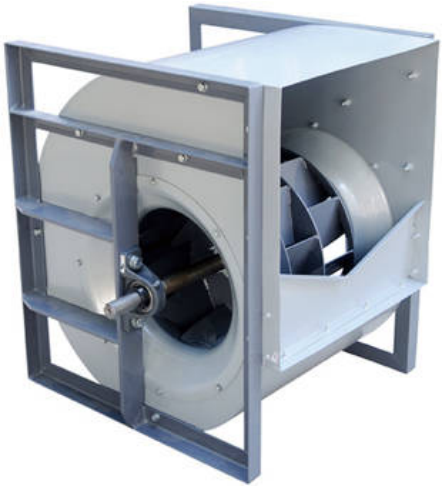

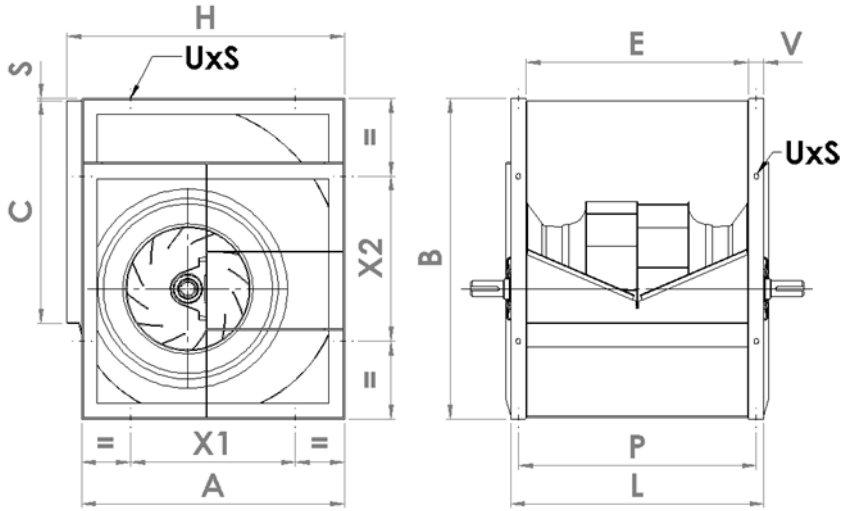

RDH...	A mm	B mm	C mm	E mm	H mm	L mm	P mm	S mm	V mm	X1 mm	X2 mm	UxS mm
180	290	346	229	229	322	269	259	5	20	180	180	11x16
200	306	370	256	256	343	306	286	4	25	224	224	11x16
225	345	415	288	288	362	338	318	3	25	224	224	11x16
250	381	461	322	322	416	372	352	4	25	224	224	11x16
280	429	518	361	361	463	421	391	5	30	280	280	13x18
315	480	578	404	404	516	464	434	3	30	280	280	13x18
355	544	655	453	453	574	533	493	6	40	355	355	13x18
400	613	736	507	507	651	587	547	5	40	355	355	13x18
450	687	841	569	569	726	649	619	5	40	530	530	13x18
500	750	918	638	638	800	718	688	5	40	530	530	13x18
560	845	1030	715	715	893	815	765	7	50	530	530	13x18
630	940	1157	801	801	993	901	851	6	50	530	530	13x18
710	1050	1303	898	898	1113	998	948	7	50	630	630	17x22
800	1181	1468	1007	1007	1255	1107	1057	7	50	710	710	17x22
900	1319	1648	1130	1130	1408	1230	1180	7	50	800	800	17x22
1000	1451	1810	1267	1267	1541	1367	1317	9	50	900	900	17x22

TDA – FORWARD CURVED BLADES: DOUBLE INLET

Belt drive

This range of low-pressure and high-flow centrifugal fans is particularly suitable for cooling units and the belt-drive facilitates the use of non-specific motors. There are many assembly possibilities and these products are available in single, double or triple versions. These products come in 11 sizes for the L (light) series and 19 sizes for the R (reinforced) series.



Standard construction:

- Casing made by spot welding and impellers made from pre-galvanized steel.
- Impeller with stapled blades and G6.3 balanced according to ISO 1940
- Transmission line keyed on both sides
- Self-aligned, sealed and greased for life bearings for the light series
- Bearings with grease fittings from size 20/20 for the reinforced series.

Option:

- Stainless steel (304L)
- Epoxy paint finish
- Set of feet for sizes 7/7 to 18/18

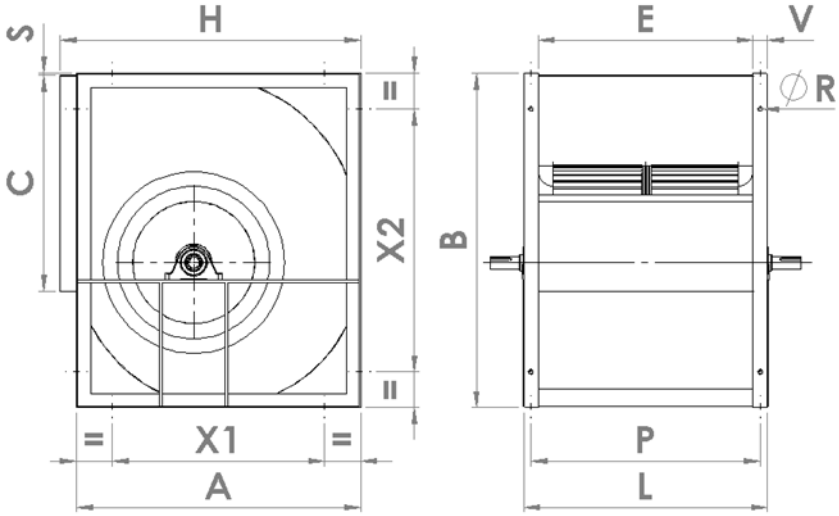

TDA ./.	A mm	B mm	C mm	E mm	H mm	L mm	P mm	S mm	V mm	X1 mm	X2 mm	ØR mm
7/7	295	330	209	232	315	280	258	6	24	220	255	10
9/9	355	404	265	298	380	346	323	6	24	280	327	10
10/10	402	452	290	326	432	374	350	6	24	326	377	10
12/12	475	534	342	386	505	444	416	6	29	384	443	10
15/15	553	622	404	473	585	532	504	6	29	460	531	10
18/18	666	754	480	556	700	626	592	6	35	553	641	10
20/20	795	935	604	602	840	682	642	6	40	595	735	12
22/22	863	1019	695	655	908	735	695	6	40	663	819	12
25/25	953	1142	794	765	998	845	805	6	40	753	942	12
30/28	1159	1374	933	890	1204	970	930	6	40	959	1174	12

TDA PERFORMANCES

Series L (light) and Series R (reinforced)

Series L TDA ./.	Max. velocity rpm	Max. flow rate m3/h	Max. total P. Pa	Max. abs. P. kW
7/7	2500	3100	880	1.0
9/7	2000	4250	960	1.5
9/9	2000	5100	930	1.5
10/8	1700	5150	900	1.5
10/10	1700	6100	950	2.0
12/9	1500	6850	950	2.2
12/12	1500	8550	950	3.0
15/11	1200	9700	930	3.0
15/15	1200	12350	930	4.0
18/13	1000	13300	1000	5.0
18/18	1000	17300	900	5.0

Series R TDA ./.	Max. velocity rpm	Max. flow rate m3/h	Max. total P. Pa	Max. abs. P. kW
7/7	3100	3100	1220	1.5
9/7	2400	4250	1270	2.0
9/9	2400	5100	1270	2.3
10/8	2200	5150	1420	3.0
10/10	2200	6100	1400	3.0
12/9	1800	6850	1400	3.5
12/12	1800	8550	1220	3.5
15/11	1400	9700	1220	5.0
15/15	1400	12350	1180	5.5
18/13	1200	13300	1300	6.0
18/18	1200	17300	1180	7.0
20/15	900	19650	900	7.5
20/20	900	23550	880	9.0
22/15	900	23150	1050	11.5
22/20	900	27100	1080	11.5
22/22	900	29500	1070	11.5
25/20	700	34200	900	11.0
25/25	700	39350	900	13.0
30/20	600	40850	970	15.0
30/28	600	53800	980	15.0

Notes:
The speeds are indicated for impellers made from galvanized steel.

For ancillaries / standard or specific installations, please consult the sales team.

Outlet flange

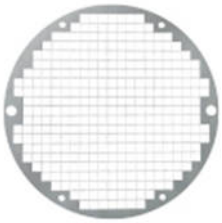

Inlet safety guard

Outlet flexible coupling flange

Anti-vibration mount

TMD – FORWARD CURVED BLADES: DOUBLE INLET

Incorporated motor

These fans work in direct coupling and the non-ventilated motor is positioned in the impeller and benefits from a good level of cooling. The fluid temperature and the ambient air must, however, remain below 50°C.
The motors that fit this range are single-phase 4 or 6 poles as standard up to size 9/9 and can optionally be three phases 6 poles up to size 15/15.

Standard construction:

- Casing made by spot welding and impellers made from Z275 steel.
- Impeller with stapled blades and G6.3 balanced according to ISO 1940
- Temperature -20 to +45°C

Option:

- Epoxy paint
- Set of feet for sizes 7/7 to 15/15

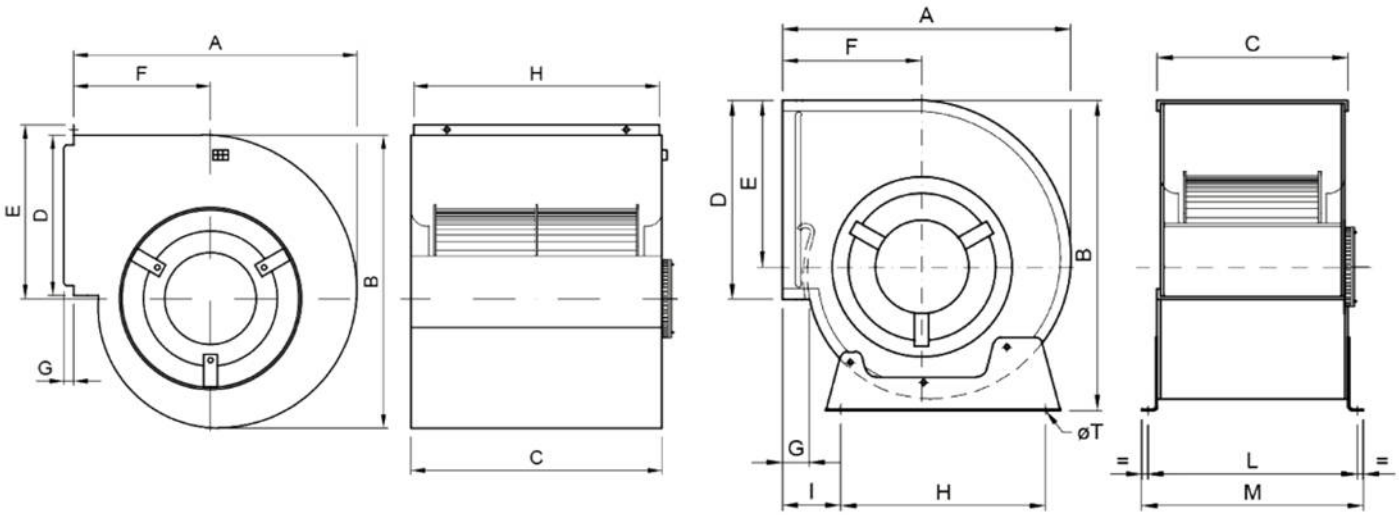

TMD ./.	A mm	B mm	C mm	D mm	E mm	F mm	G mm	H mm	I mm	L mm	M mm	ØT mm
5/8	198	202	255	100	123	100	5	253	-	-	-	-
7/7	307	326	232	208	180	146	27	228	55	258	280	10x15
9/7	375	400	249	265	218	180	33	280	75	273	292	10x15
9/9	375	400	298	265	218	180	33	280	75	324	342	10x15
10/8	427	452	274	290	245	207	38	317	80	296	316	10x15
10/10	427	452	326	290	245	207	38	317	80	348	370	10x15
12/9	498	530	309	341	292	236	38	400	82	330	355	10x16
12/12	498	530	386	341	292	236	38	400	82	406	430	10x16
15/15	578	622	473	402	343	271	38	460	91	500	527	12x20

TMD PERFORMANCES

Incorporated motor

TMD ./.	No. of poles	Inst. P kW	Nb. Sp. xV	Mot. V rpm	1x 230V Imax. A	3x 230V Imax. A	3x 400V Imax. A	Max. Flow m3/h	Max. Pt. Pa	Weight kg
5/8	4	0.04	1V	1200	0.4	-	-	550	130	2.5
7/7	4	0.15	1V	1230	1.4	-	-	1700	260	8.2
7/7	4	0.15	3V	1230	1.5	-	-	1700	260	8.2
7/7	4	0.37	1V	1320	3.3	-	-	2400	270	11.2
9/7	4	0.37	1V	1320	3.3	-	-	2600	440	13.5
9/7	4	0.55	1V	1310	4.5	-	-	3200	450	14.8
9/7	4	0.55	3V	1310	4.0	-	-	3200	450	14.8
9/9	4	0.37	1V	1320	3.3	-	-	2750	400	14.1
9/9	4	0.55	1V	1310	4.5	-	-	3400	440	15.4
9/9	4	0.55	3V	1310	4.0	-	-	3400	440	15.4
10/8	4	0.37	1V	1320	3.3	-	-	2500	490	14.9
10/8	4	0.55	1V	1310	4.5	-	-	3100	520	16.2
10/8	4	0.55	3V	1310	4.0	-	-	3100	520	16.2
10/10	4	0.37	1V	1320	3.3	-	-	2450	510	15.5
10/10	4	0.55	1V	1310	4.5	-	-	3170	490	16.8
10/10	4	0.55	3V	1310	4.0	-	-	3170	490	16.6
7/7	6	0.08	1V	820	0.85	-	-	1490	120	7.8
9/7	6	0.15	1V	850	1.5	-	-	2200	200	11.6
9/7	6	0.25	1V	830	2.2	-	-	2800	200	13.4
9/9	6	0.15	1V	850	1.5	-	-	2400	200	12.2
9/9	6	0.25	1V	830	2.2	-	-	3100	190	14.0
10/8	6	0.25	1V	830	2.2	-	-	2900	250	14.8
10/8	6	0.37	1V	880	2.7	-	-	3250	250	25.9
10/10	6	0.25	1V	830	2.2	-	-	2900	240	15.4
10/10	6	0.37	1V	880	2.7	-	-	3900	250	16.5
10/10	6	0.55	1V	840	4.5	-	-	4200	250	18.4
10/10	6	0.55	3V	840	4.1	-	-	4200	250	18.4
12/9	6	0.55	1V	850	5.0	-	-	5150	330	20.6
12/9	6	0.55	3V	850	5.0	-	-	5150	330	20.4
12/9	6	0.75	1V	850	6.0	-	-	5750	330	21.7
12/9	6	0.75	3V	850	6.0	-	-	5750	330	21.7
12/9	6	1.10	1V	880	7.3	-	-	5500	350	26.1
12/12	6	0.55	1V	850	5.0	-	-	5300	310	21.9
12/12	6	0.55	3V	850	5.0	-	-	5300	310	21.7
12/12	6	0.75	1V	850	6.0	-	-	6000	290	23.0
12/12	6	0.75	3V	850	6.0	-	-	6000	290	23.0
12/12	6	1.10	1V	880	7.3	-	-	6300	330	27.4
10/10	6	0.75	1V	920	-	4.0	2.4	4500	250	18.2
12/9	6	0.75	1V	880	-	4.0	2.4	4900	340	20.6
12/9	6	1.10	1V	850	-	6.6	3.8	6150	360	21.9
12/12	6	0.75	1V	880	-	4.0	2.4	5300	320	21.9
12/12	6	1.10	1V	850	-	6.6	3.8	7000	340	23.2
15/15	6	2.20	1V	890	-	10.9	6.3	10000	460	40.8

Notes:

The current is indicated for a 50Hz electricity network.

The speeds are indicated for impellers made from galvanized steel.

For ancillaries / standard or specific installations, please consult the sales team.

Outlet flange

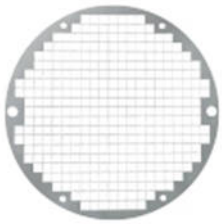

Inlet safety guard

Support feet

Variable speed drive

CP – BACKWARD CURVED BLADES

Standard range with plastic casing

The CP range is for industrial applications in a corrosive or chemical environment, battery rooms, etc. The characteristics of the standard range are:

- Motor speed: available in 2, 4 and 6 poles
- Flow rate: up to 6600m³/h
- Static pressure: up to 1600Pa
- Casing: plastic molding (PE, polyethylene)
- Impeller in plastic material (PP, polypropylene)
- Motor stand: structure in painted steel (epoxy coating)
- Orientation: RD0 to RD315 and LG0 to LG315 in 45° increments

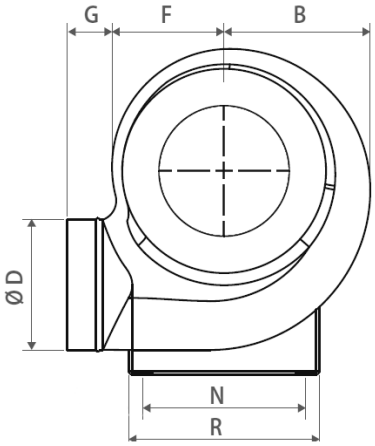

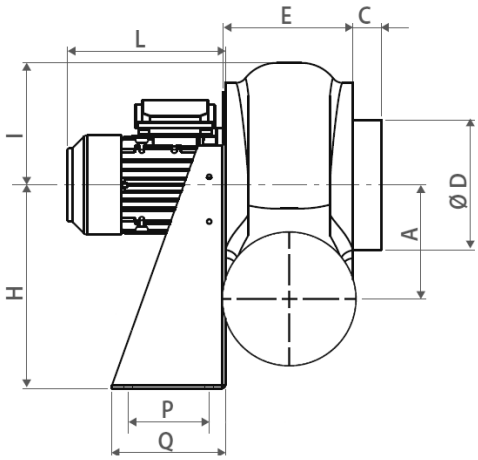

CP...	V. rpm	P. kW	LwA dBA	A mm	B mm	C mm	D mm	E mm	F mm	G mm	H mm	I mm	L mm	N mm	P mm	Q mm	R mm	Weight kg
CP202	2760	0.18	62	140	180	35	160	160	138	55	250	150	195	200	100	140	235	9
CP254	1370	0.12	54	173	228	35	200	185	170	55	310	190	190	255	100	140	290	10
CP252	2800	0.37	71	173	228	35	200	185	170	55	310	190	220	255	100	140	290	13
CP284	1370	0.18	55	208	255	40	225	195	190	70	350	210	190	280	120	190	316	14
CP282	2850	0.75	75	208	255	40	225	195	190	70	350	210	240	280	120	190	316	19
CP314	1400	0.25	59	240	280	40	250	200	210	70	410	230	220	320	150	230	355	19
CP312	2850	1.50	79	240	280	40	250	200	210	70	410	230	290	320	150	230	355	26
CP354	1400	0.37	61	260	312	40	280	237	230	55	445	270	220	355	150	230	390	23
CP352	2870	2.20	80	260	312	40	280	237	230	55	445	270	290	355	150	230	390	32
CP404	1420	0.55	69	290	356	40	315	252	264	55	495	295	240	325	170	250	365	33
CP406	910	0.25	56	290	356	40	315	252	264	55	495	295	220	325	170	250	365	30
CP454	1440	1.10	70	324	400	40	355	287	295	55	550	330	290	370	170	250	410	40
CP456	930	0.37	59	324	400	40	355	287	295	55	550	330	240	370	170	250	410	37

CP..4 PERFORMANCES: 4 Poles (1500 rpm)

Common operating range

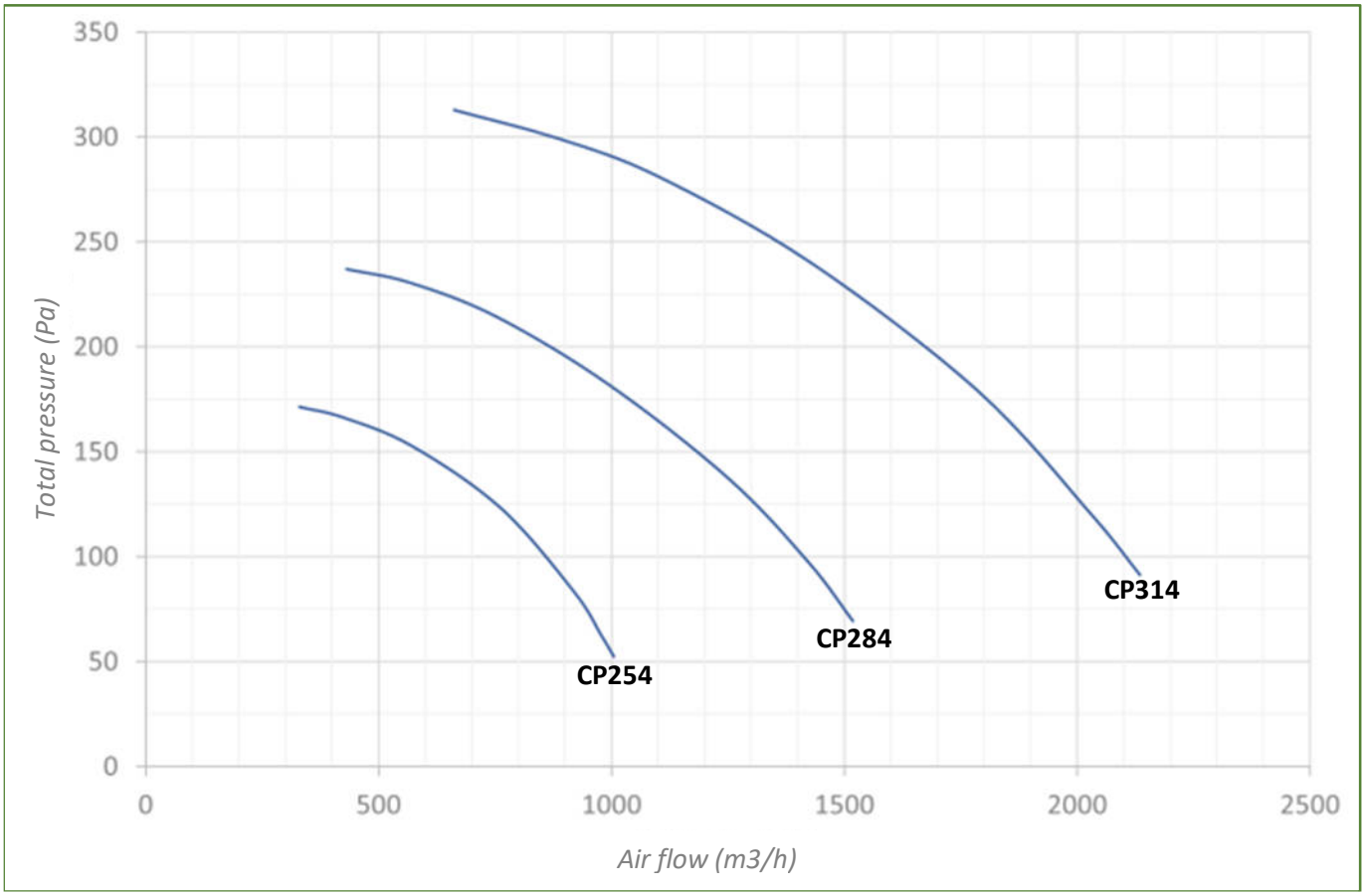

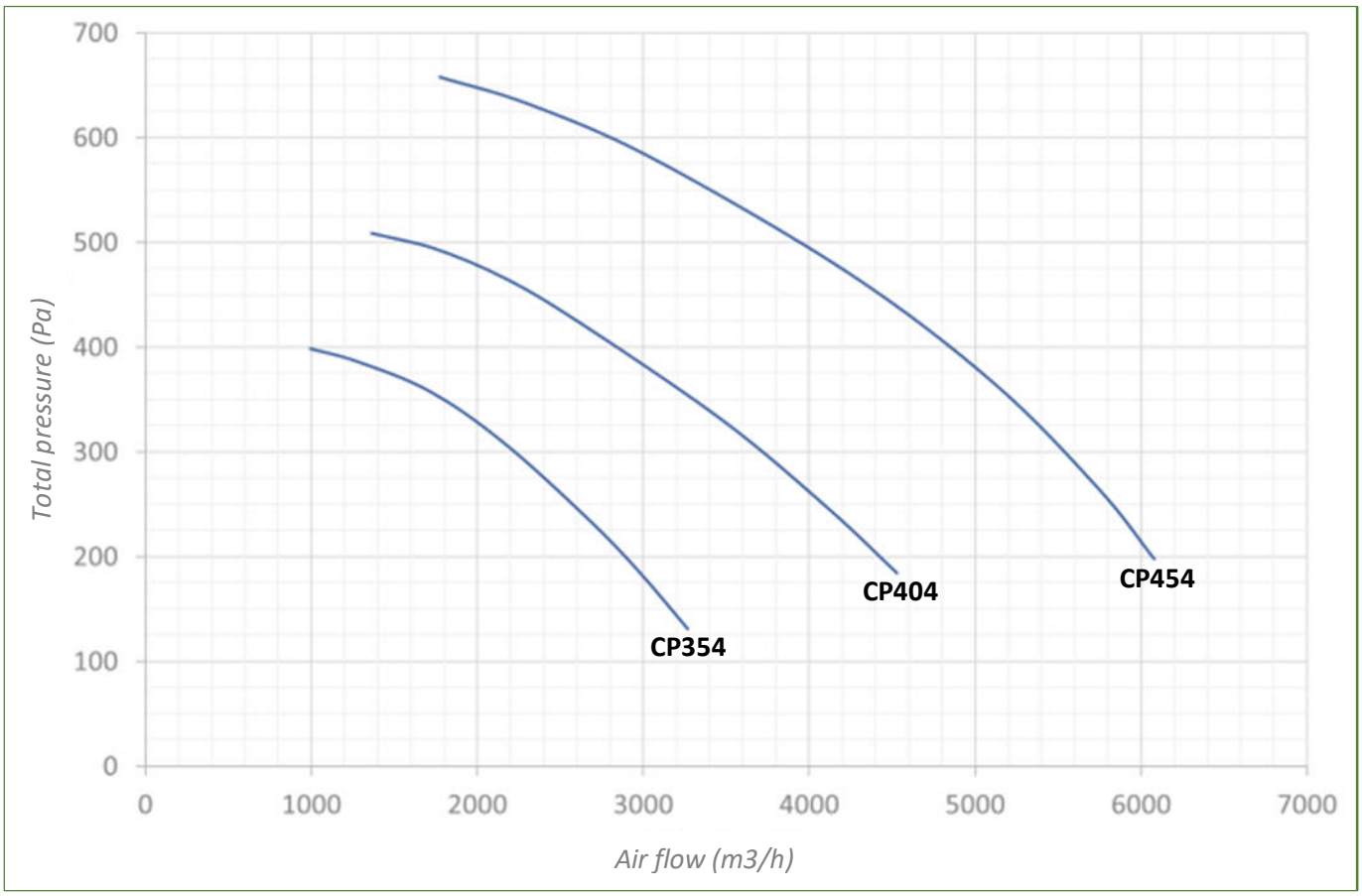

CP..2 PERFORMANCES: 2 Poles (3000 rpm)

Common operating range

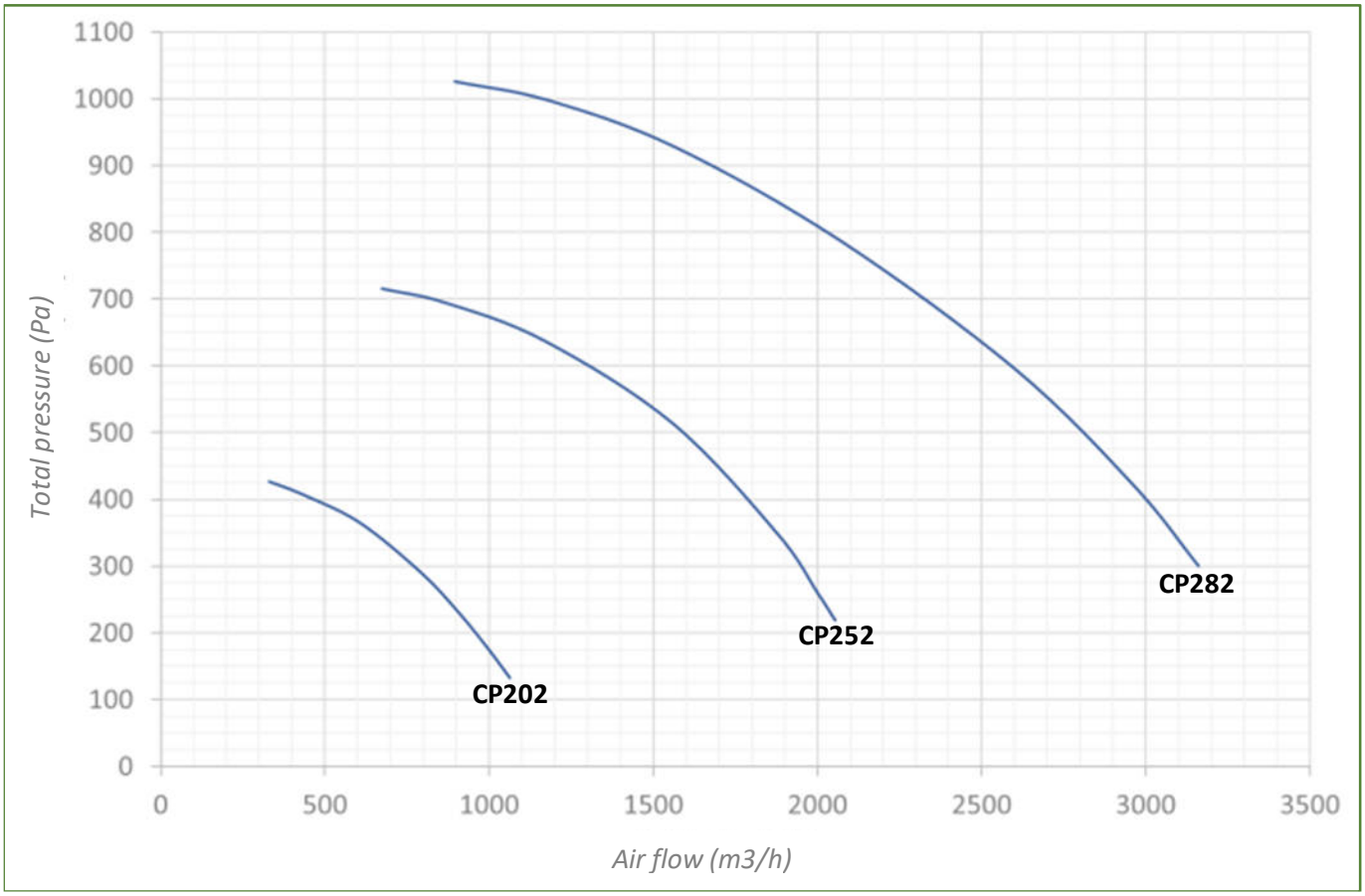

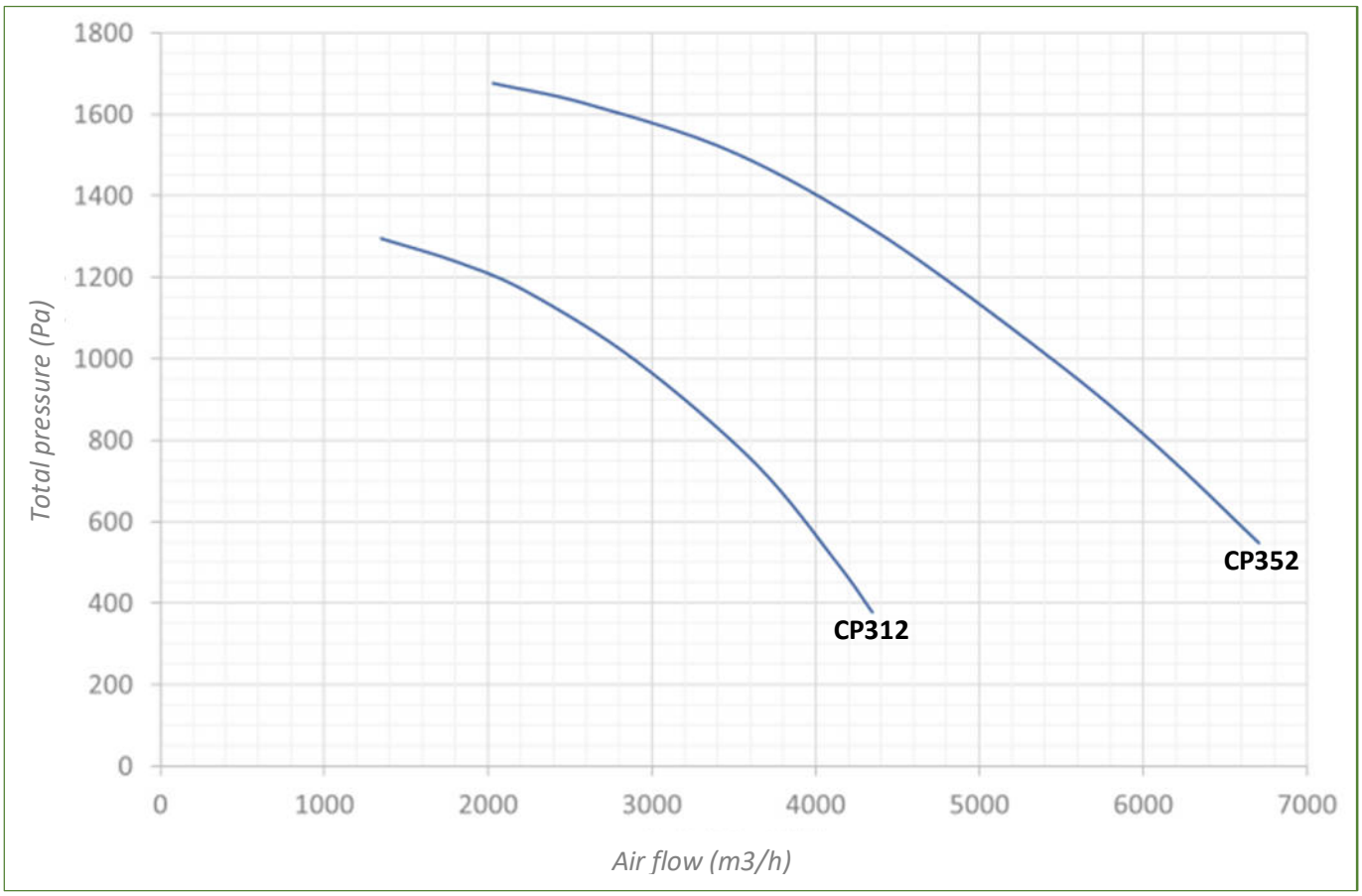

CP..6 PERFORMANCES: 6 Poles (1000 rpm)

Common operating range

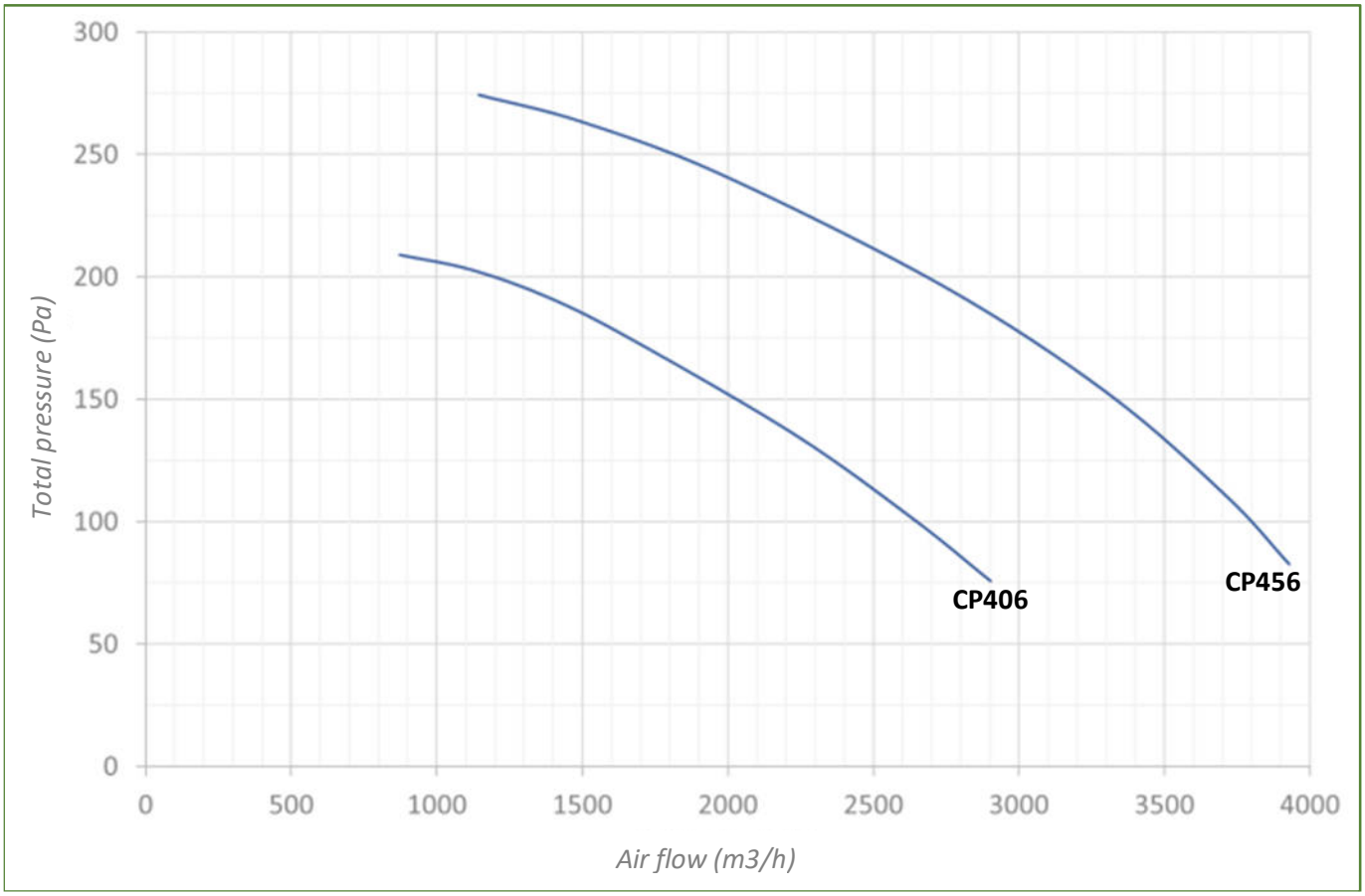

Available ancillaries:

Manual backdraught damper

Rain and anti-bird cap

Protective cover

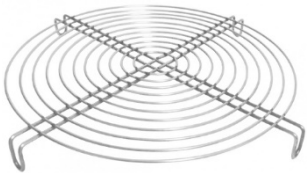

Safety guard

Flexible coupling flange

Circular reducer

Bend

Silencer

CB – FORWARD CURVED BLADES

Standard range with steel casing

The CB range is designed to transport clean air and smoke up to temperatures of +60°C. The main characteristics of the standard range are:

- Motor speed: available in 2, 4 and 6 poles
- Flow rate: up to 4000m³/h
- Static pressure: up to 1700Pa
- Painted or electro zinc steel casing with inlet safety guard
- Impeller with stapled aluminium blades
- Motor stand: B5 or B35 flange mounting
- Orientation: RD0 to RD315 and LG0 to LG315 in 45° increments

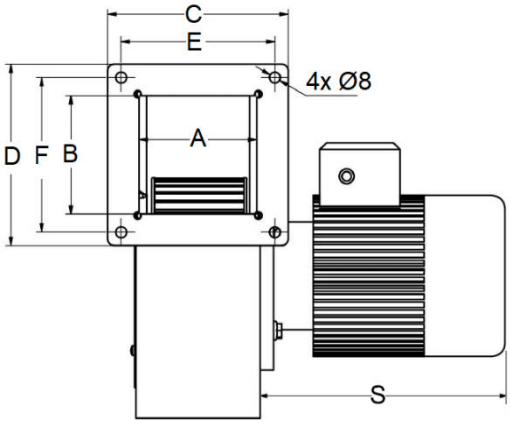

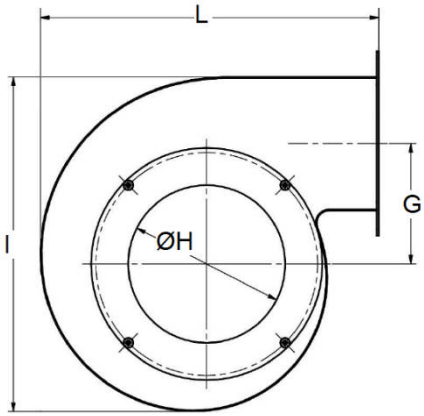

CB...	V. rpm	P. kW	A mm	B mm	C mm	D mm	E mm	F mm	G mm	H mm	I mm	L mm	S mm	Weight kg
CB12	2800	0.09	46	46	92	92	78	78	61	83	159	163	180	4
CB22	2800	0.09	69	63	115	115	95	95	70	83	170	185	180	5
CB32	2800	0.18	90	90	133	133	115	115	65	113	201	208	180	6
CB34	1400	0.18	90	90	133	133	115	115	65	113	201	208	180	6
CB42	2800	0.18	90	90	133	133	115	115	93	113	248	252	180	6
CB44	1400	0.18	90	90	133	133	115	115	93	113	248	252	180	6
CB52	2800	0.37	113	113	160	160	138	138	115	134	300	293	180	8
CB54	1400	0.18	113	113	160	160	138	138	115	134	300	293	180	7
CB62	2800	0.55	123	113	175	165	149	138	117	134	302	289	200	9
CB64	1400	0.18	123	113	175	165	149	138	117	134	302	289	200	8
CB72	2800	1.10	135	135	190	190	165	165	141	168	373	333	230	16
CB74	1400	0.25	135	135	190	190	165	165	141	168	373	333	230	12
CB92	2800	2.20	162	173	222	233	194	205	160	187	438	400	265	23
CB94	1400	0.55	162	173	222	233	194	205	160	187	438	400	265	15
CB96	900	0.18	162	173	222	233	194	205	160	187	438	400	265	14
CB104	1400	1.10	202	193	262	253	233	224	193	225	513	465	265	21
CB106	900	0.37	202	193	262	253	233	224	193	225	513	465	265	20

CB..4 PERFORMANCES: 4 Poles (1500 rpm)

Common operating range

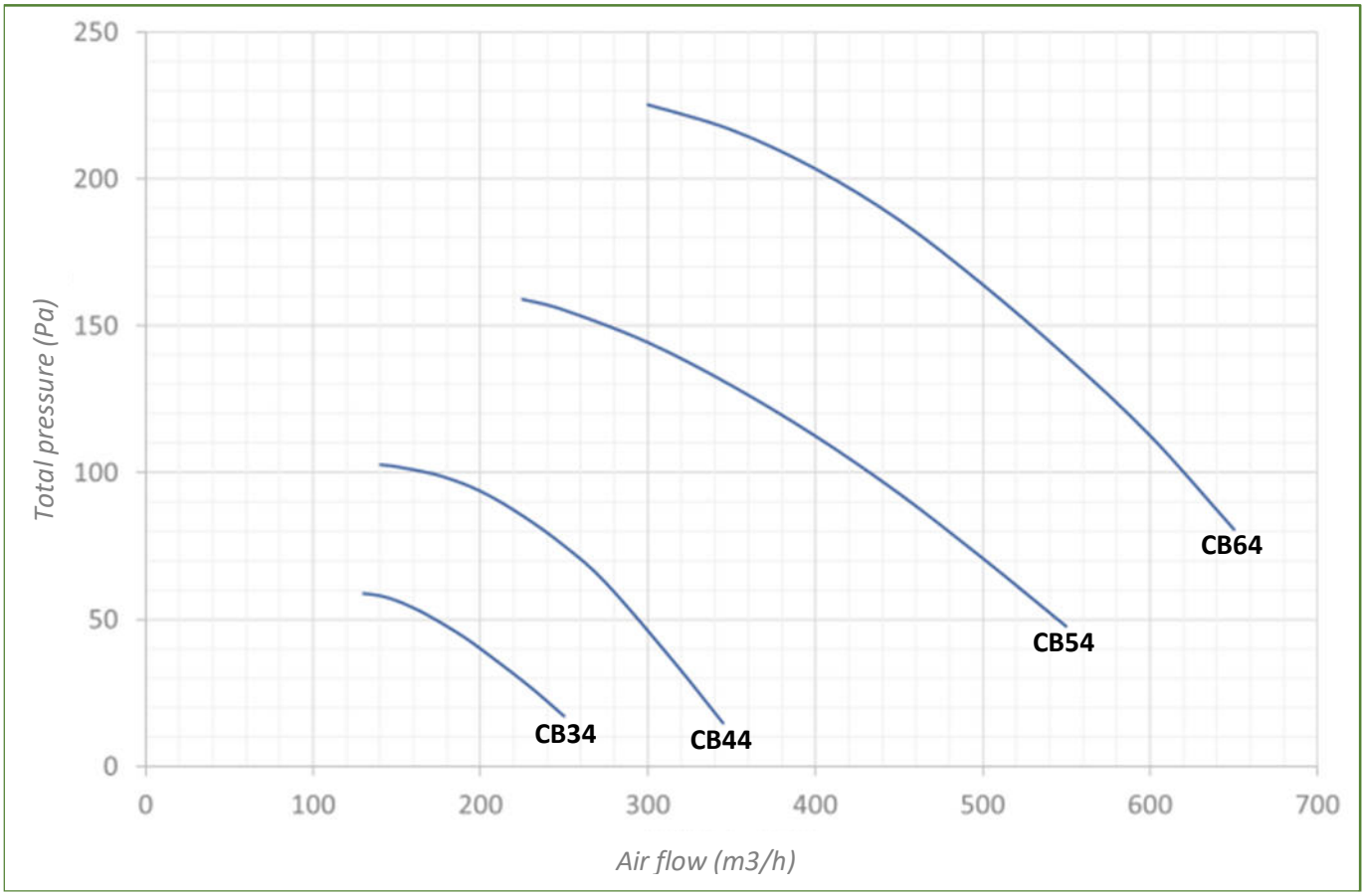

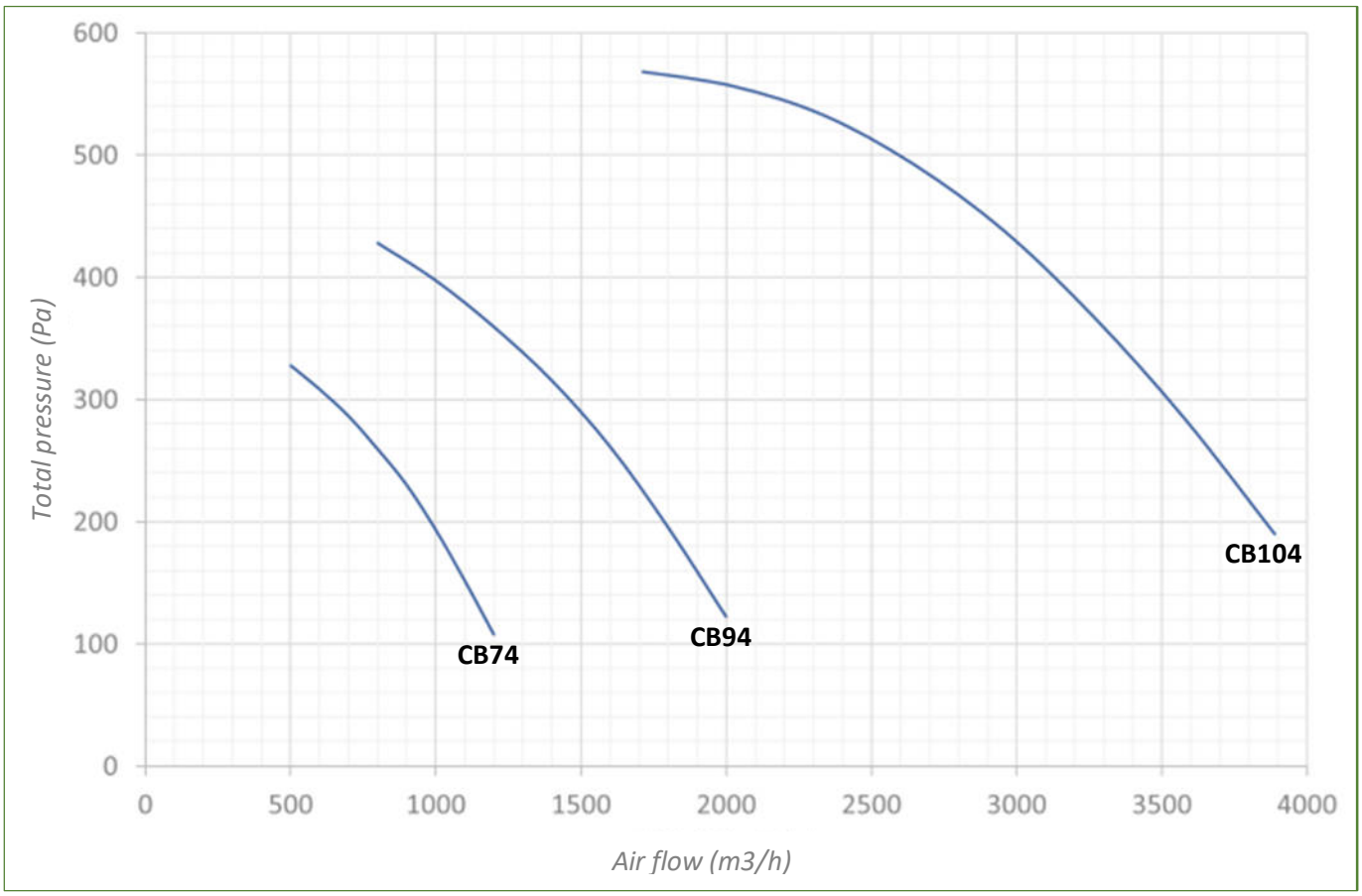

CB..2 PERFORMANCES: 2 Poles (3000 rpm)

Common operating range

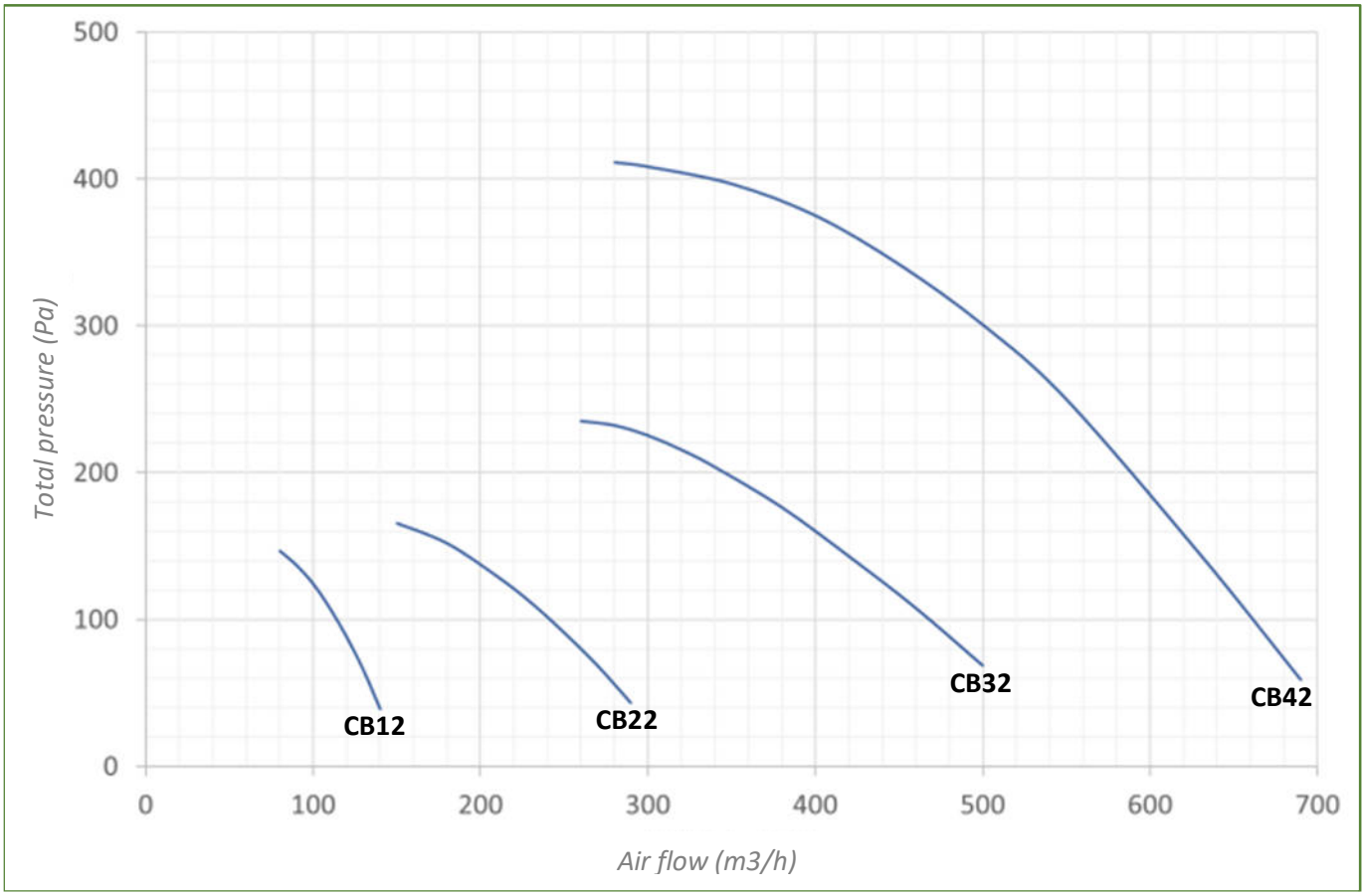

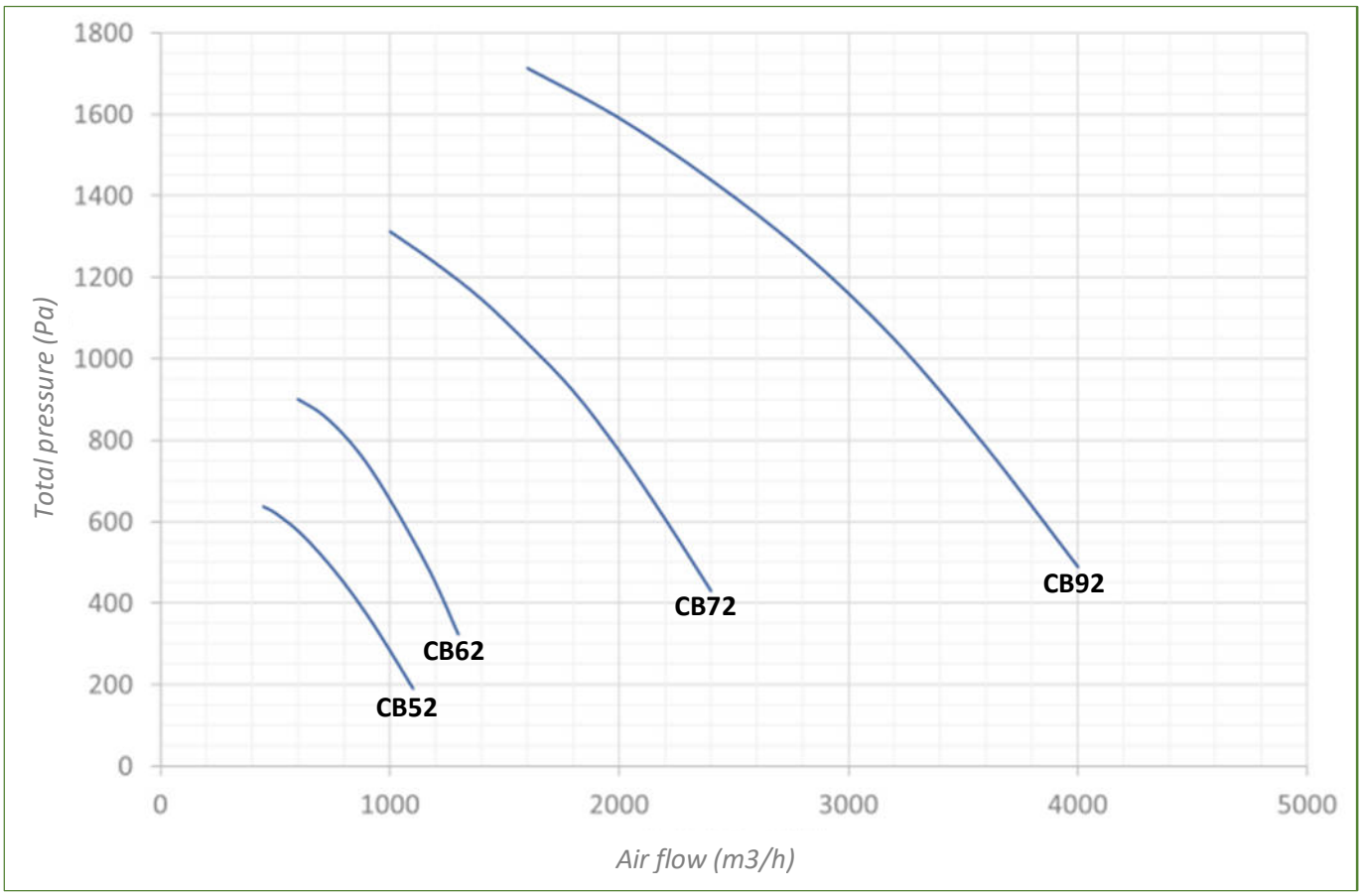

CB..6 PERFORMANCES: 6 Poles (1000 rpm)

Common operating range

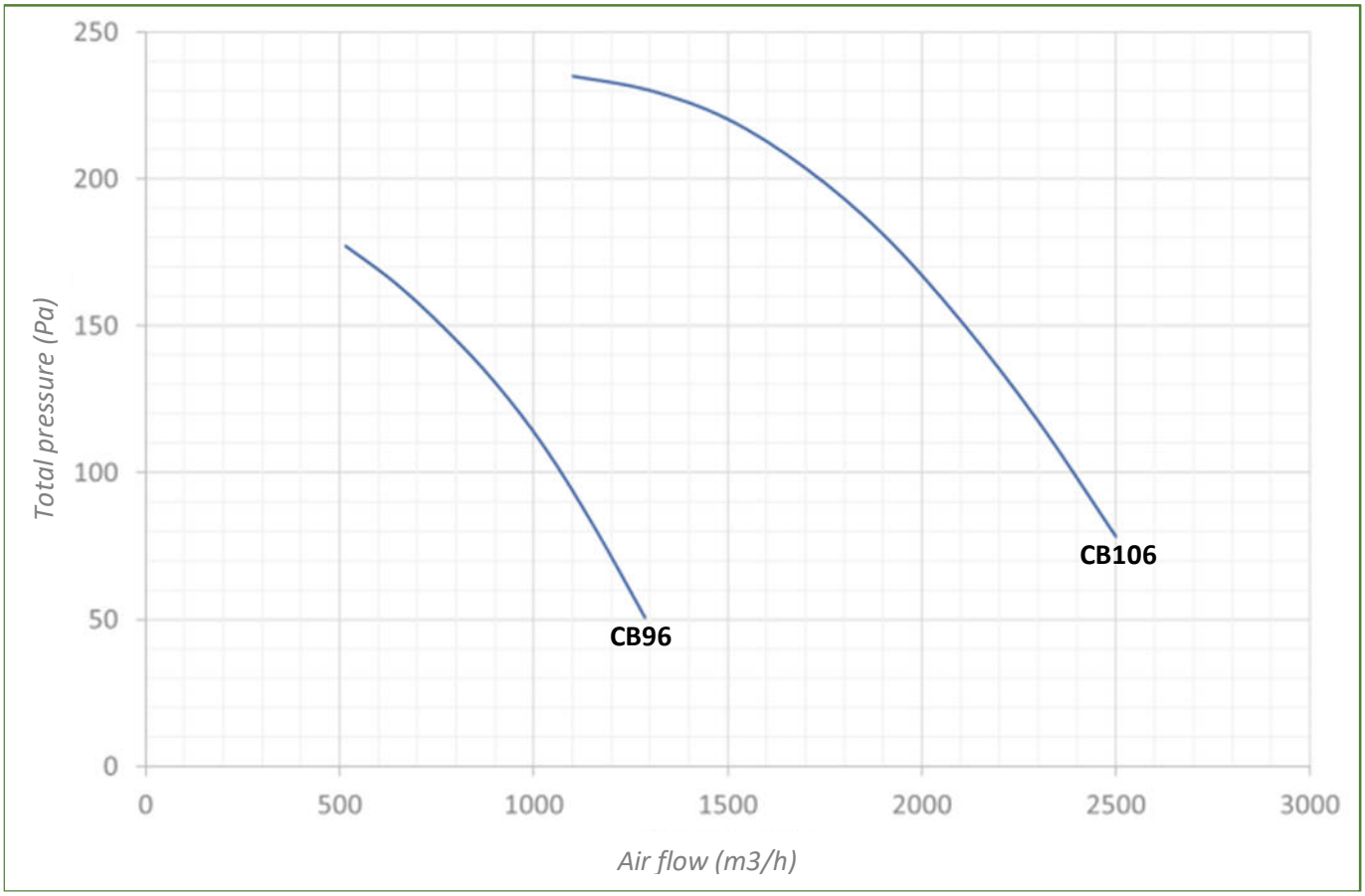

Do you have specific requirements or need ancillaries? Please ask us.

Parallel mounting...

Speed controlling device, flow rate reducer, etc.

VGND / VGNT – CENTRIFUGAL IN BOX: DOUBLE INLET

Direct drive (VGND) / Belt drive (VGNT)

These CMV-type plenum boxes are for renewing air in premises with or without filtration (additional pressure loss to be integrated in this configuration depending on the type of filter used). Sizes 7/7 to 12/12 are cubic with one panel per side. The lateral and rear panels are interchangeable, making it possible to position the suction inlet on the sides. These plenum boxes can accommodate up to 3 inlet holes; the relevant panels may be ordered on request.

From size 15/15 to 20/20, the suction and discharge inlets are in-line only. The housing of sizes 22/22 and 25/25 is made of an assembly of several panels per side.

Standard construction:

- Housing in Z275 pre-galvanized steel
- Belt-drive for sizes 7/7 to 25/25 (see powers P. belt-drive, VGNT)
- Direct coupling for sizes 7/7 to 12/12 only (see powers P. direct, VGND)
- Set of feet for sizes 20/20 to 25/25

Option:

- Epoxy paint
- Acoustic insulation
- Set of feet for sizes 7/7 to 18/18

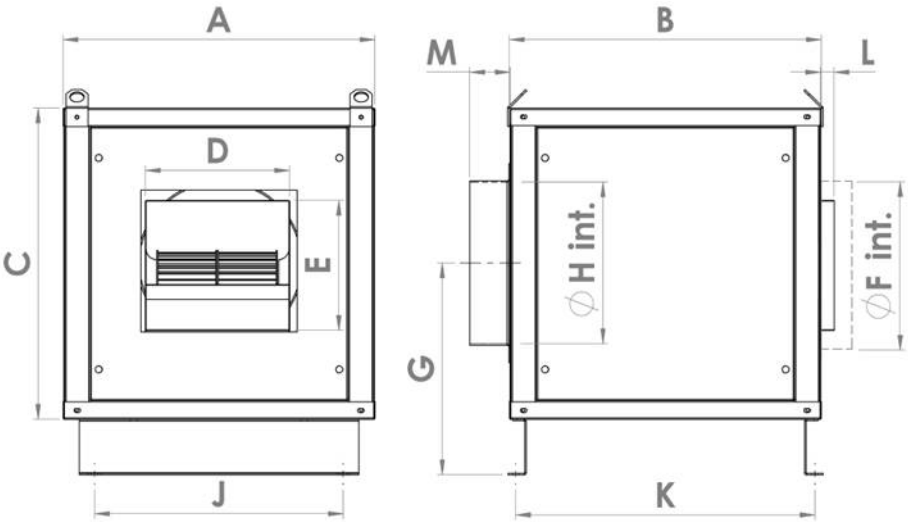

VGN ./.	P. VGND kW	P. VGNT kW	A mm	B mm	C mm	D mm	E mm	F mm	G mm	H mm	J mm	K mm	L mm	M* mm	Weight kg
7/7	0.18	0.75	500	500	500	232	208	354	340	254	350	400	65	65	45
9/9	0.55	1.50	550	550	550	298	265	454	370	315	450	500	65	65	50
10/10	0.75	1.50	630	630	630	326	290	454	415	404	530	600	65	65	60
12/12	1.50	2.20	700	700	700	386	341	606	440	454	600	670	65	65	80
15/15	-	3.00	900	960	750	473	405	-	485	550	800	900	30	60	120
18/18	-	3.00	1180	1160	900	556	540	-	560	630	1000	1028	40	60	160
20/20	-	4.00	1100	1400	1080	630	629	-	650	900	1000	1350	40	60	250
22/22	-	4.00	1500	1600	1200	692	695	-	710	1000	1430	1216	40	60	310
25/25	-	4.00	1675	1810	1370	765	797	-	795	1120	1600	1506	25	60	540

Notes:

*M: If using a circular flange.

TCH / TCV – ROOF FANS WITH H. / V. DISCHARGE

Standard range with steel housing

These centrifugal fans with backwards inclined blades are designed to be installed on roofs or terraces and their purpose is to extract exhaust air. This equipment is ideal for ventilating industrial premises, such as foundries, workshops, warehouses, and agricultural buildings. Designed to transport clean fluids at high flow rates and at medium pressure on extraction, the range is available in two flow directions: horizontal discharge (TCH) and vertical discharge (TCV). **For optimal installation, we recommend the option with connection to a switch or external junction box for these fans.**

Standard construction:

- Housing in Z275 pre-galvanized steel

Option:

- Epoxy paint
- Hot-dip galvanization
- 304L or 316L stainless steel
- On-off switch connector

TCH

TCV

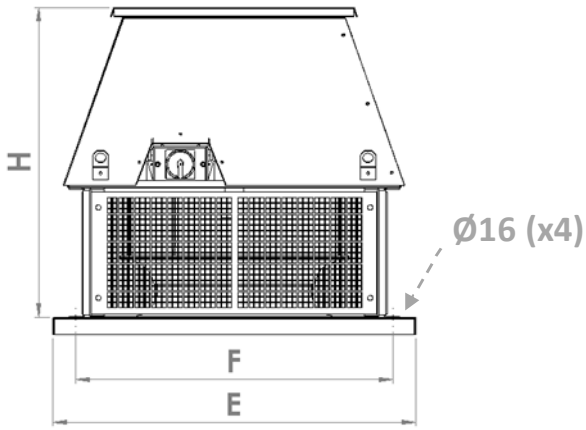

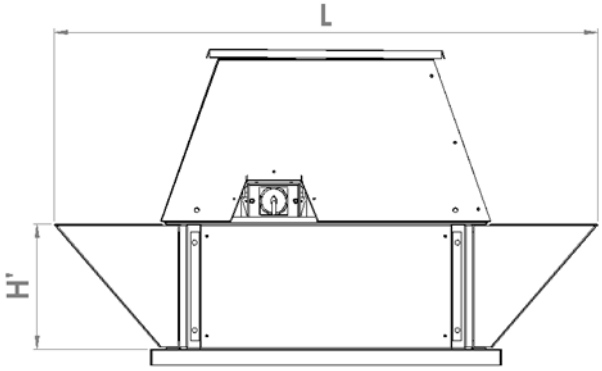

Nominal Ø mm	E mm	F mm	H mm	H' mm	L mm
400	600	500	570	400	918
450	600	500	600	400	918
500	800	700	730	570	1228
560	800	700	760	570	1228
630	800	700	790	570	1228
710	1000	900	940	600	1629
800	1000	900	1000	600	1629

TCH / TCV PERFORMANCES

Common operating range

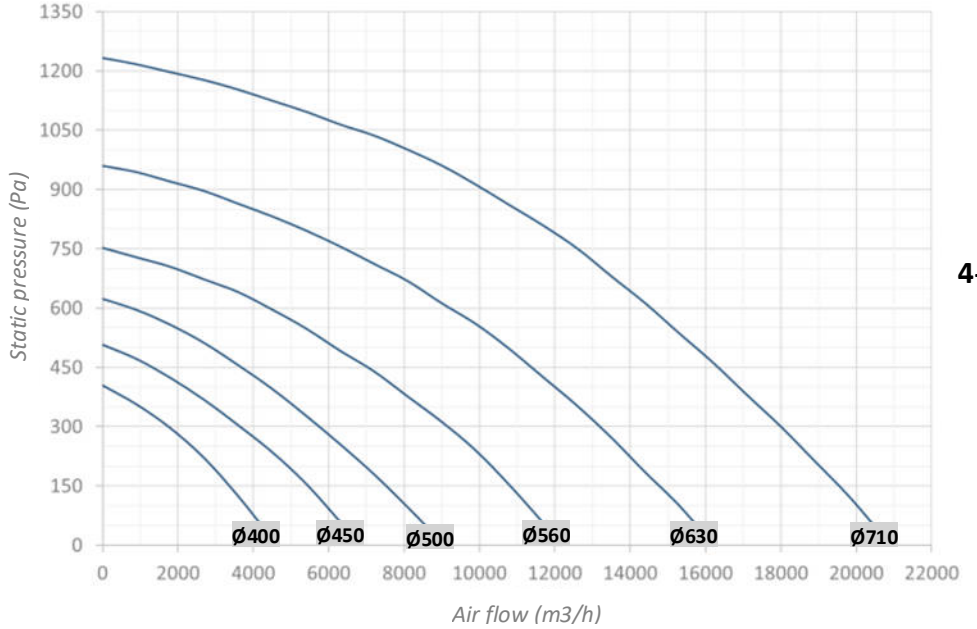

4-poles motor (1500 rpm)

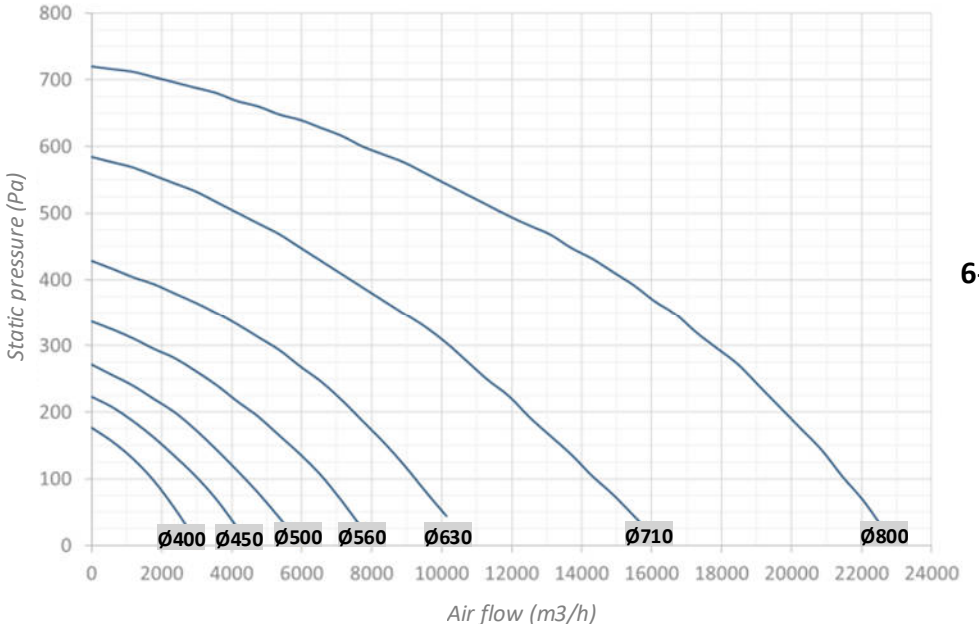

6-poles motor (1000 rpm)

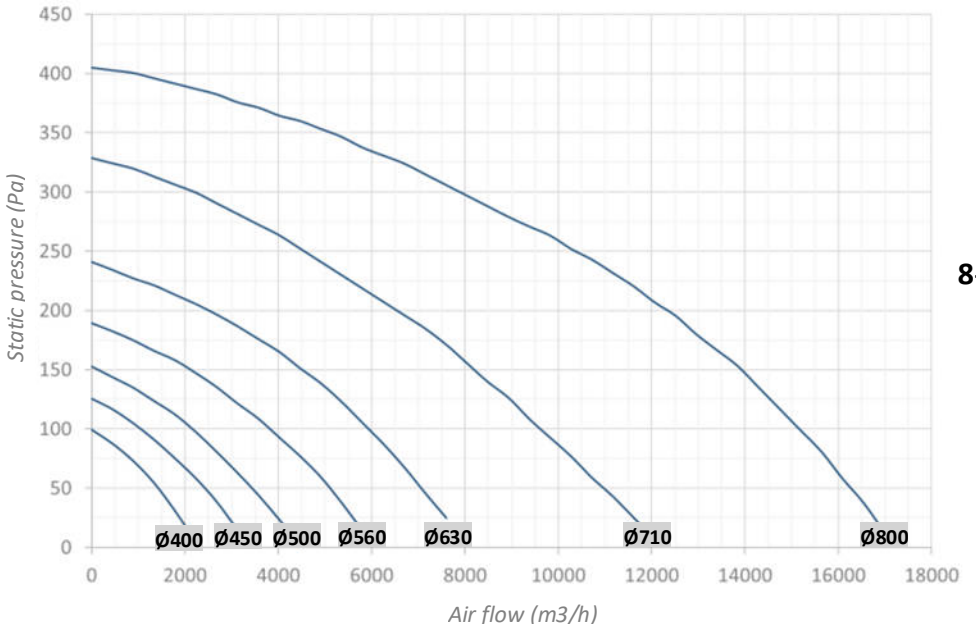

8-poles motor (750 rpm)

TCO – ROOF FAN: HORIZONTAL DISCHARGE

Standard range with plastic housing

Roof fan with horizontal discharge made from plastic, fitted with high-yield backwards inclined blades which make it very energy efficient. The roof fans in the TCO series cover a range of flow rates for the ventilation of chemical product storage areas. **For optimal installation, we recommend the option with connection to a switch or external junction box for these fans.**

- Motor polarity: available in 2, 4 and 6 poles
- Housing and cover in polyethylene (PE)
- Polypropylene (PP) impeller
- Stainless steel safety guard
- Flow rate: from 400 to 22,000m^3/h
- Static pressure: up to 1250Pa

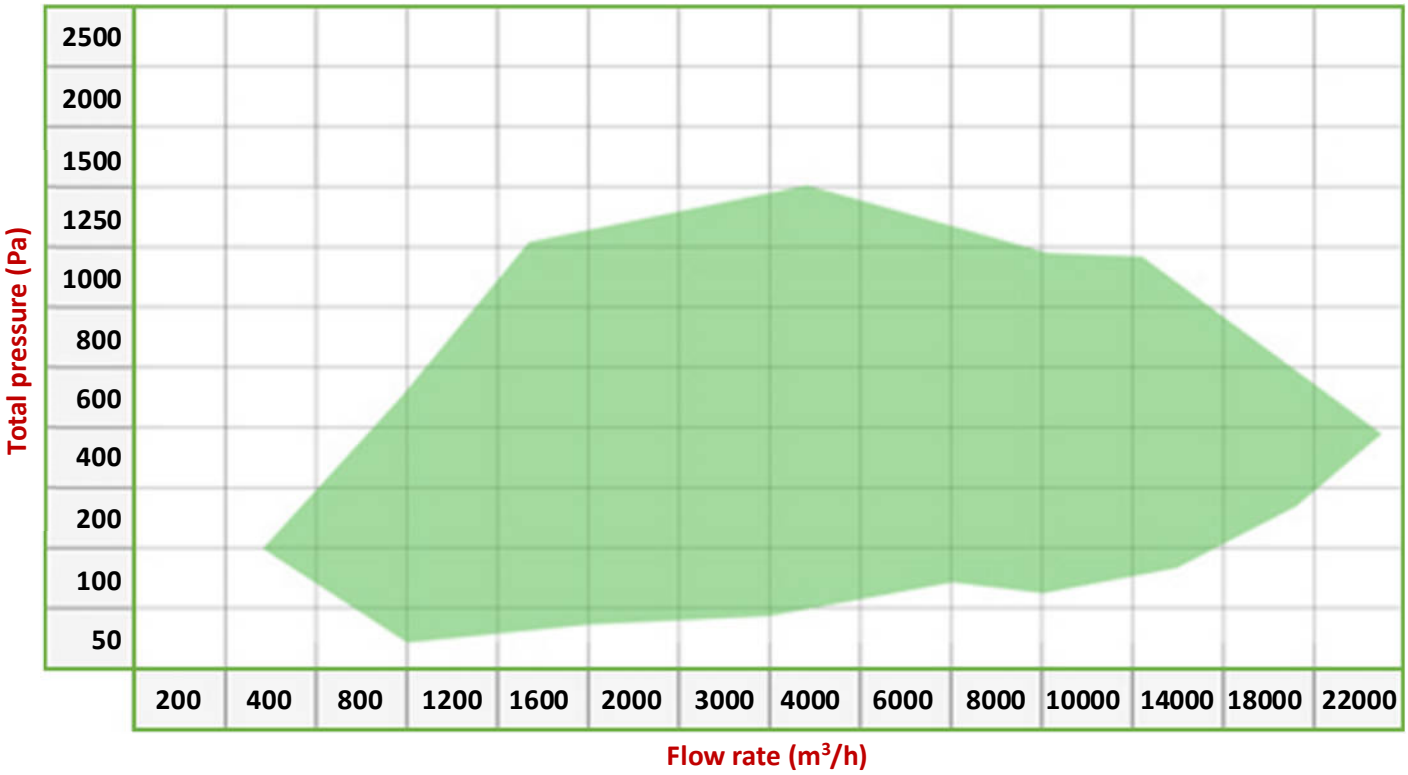

TCO DIMENSIONS

General dimensions

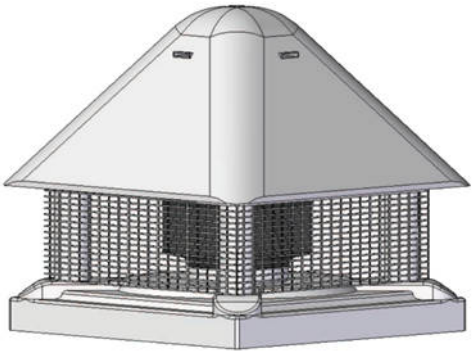

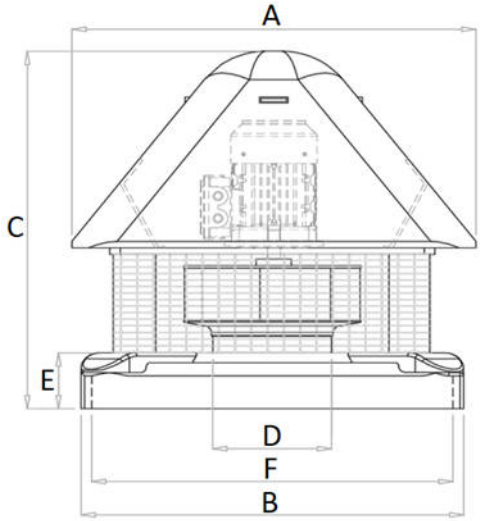

TCO ...	HA mm	P. kW	V. rpm	A mm	B mm	C mm	D mm	E mm	F mm	Weight* mm
TCO 204	63	0.12	1450	570	540	550	125	85	330	16
TCO 202	63	0.18	2850	570	540	550	125	85	330	16
TCO 254	63	0.12	1450	570	540	580	160	85	500	17
TCO 252	71	0.37	2850	570	540	580	160	85	500	18
TCO 284	63	0.18	1450	570	540	600	180	85	500	17
TCO 282	80	0.75	2850	570	540	600	180	85	500	19
TCO 316	71	0.18	930	660	540	610	200	85	500	20
TCO 314	71	0.25	1450	660	540	610	200	85	500	22
TCO 312	90	1.50	2850	660	540	610	200	85	500	22
TCO 356	71	0.18	930	660	540	640	225	85	500	22
TCO 354	71	0.37	1450	660	540	640	225	85	500	22
TCO 352	90	2.20	2850	660	540	640	225	85	500	25
TCO 406	71	0.25	930	840	750	685	250	100	700	32
TCO 404	80	0.55	1450	840	750	685	250	100	700	32
TCO 456	80	0.37	930	840	750	710	280	100	700	37
TCO 454	90	1.10	1450	840	750	710	280	100	700	39
TCO 506	80	0.55	930	1000	750	850	300	80	710	93
TCO 504	100	2.20	1450	1000	750	850	300	80	710	102
TCO 566	90	1.10	930	1000	850	1000	340	80	810	108
TCO 564	112	4.00	1450	1000	850	1000	340	80	810	132
TCO 636	112	2.20	930	1200	950	1050	390	80	900	141
TCO 634	132	5.50	1450	1200	950	1050	390	80	900	169
TCO 716	132	4.00	930	1200	1050	1200	500	80	1000	184
TCO 714	160	11.00	1450	1200	1050	1200	500	80	1000	249
TCO 806	132	5.50	930	1200	1200	1300	570	80	1150	198
TCO 856	160	7.50	930	1200	1200	1500	600	80	1150	220

Notes:

*Weights are variable according to the motorization (without ancillaries).

TCVP – ROOF FAN: VERTICAL DISCHARGE

Standard range with plastic housing

Roof fan with vertical discharge made from plastic, fitted with high-yield backwards inclined blades which make it very energy efficient. The roof fans in the TCV-P series cover a range of flow rates for the ventilation of chemical product storage areas. **For optimal installation, we recommend the option with connection to a switch or external junction box for these fans.**

- Motor polarity: available in 2, 4 and 6 poles
- Housing and cover in polyethylene (PE)
- Polypropylene (PP) impeller
- Flow rate: from 300 to 25000m^3/h
- Static pressure: up to 1500Pa
- On request: In-line mounting for duct connections

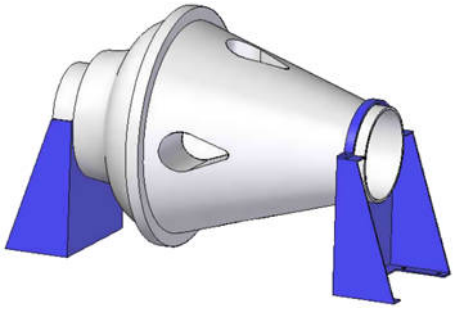

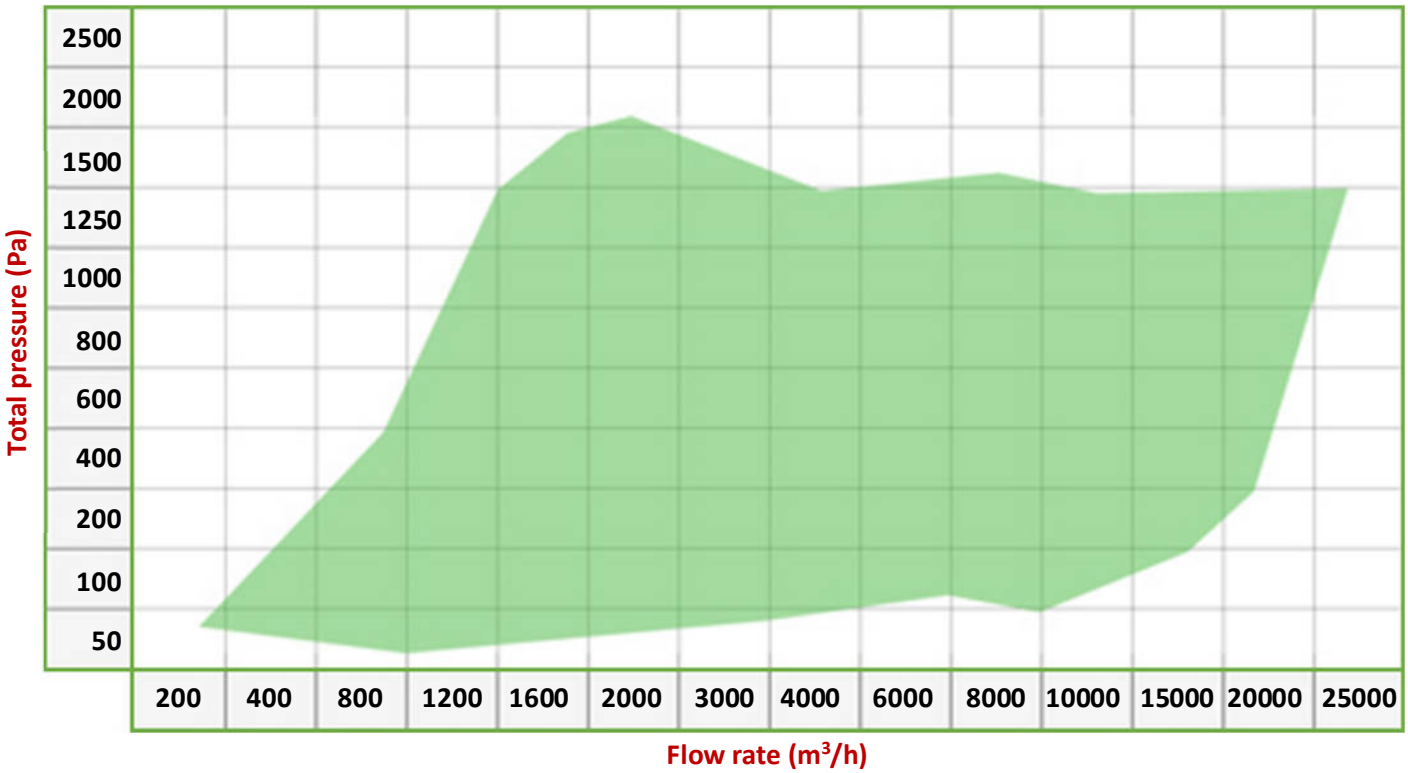

TCV DIMENSIONS

General dimensions

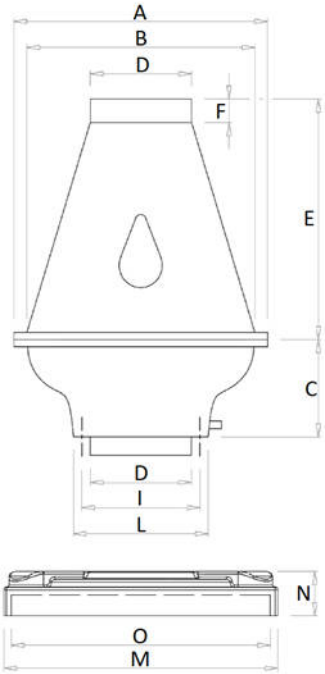

TCV 200 to 450

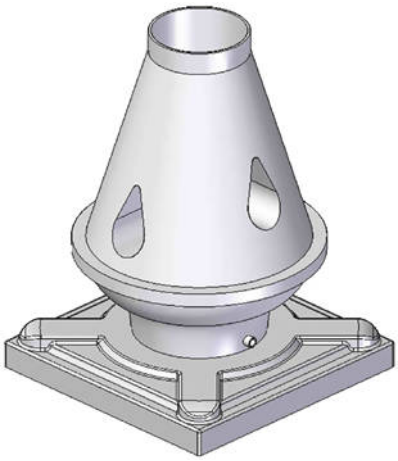

TCV 500 to 800

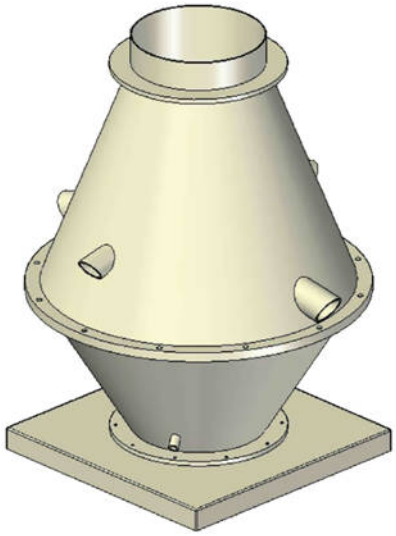

TCVP ...	HA mm	P. kW	V. rpm	A mm	B mm	C mm	D mm	E mm	F mm	I mm	L mm	M mm	N mm	O mm	Weight mm
TCVP 204	63	0.12	1450	400	350	145	160	420	40	200	240	540	80	490	10
TCVP 202	63	0.18	2850	400	350	145	160	420	40	200	240	540	80	490	10
TCVP 254	63	0.12	1450	500	450	185	200	460	50	230	265	540	80	490	13
TCVP 252	71	0.37	2850	500	450	185	200	460	50	230	265	540	80	490	13
TCVP 314	71	0.25	1450	600	560	240	280	600	50	325	365	540	80	490	26
TCVP 312	90	1.50	2850	600	560	240	280	600	50	325	365	540	80	490	33
TCVP 356	71	0.18	930	600	560	240	280	600	50	325	365	540	80	490	26
TCVP 354	71	0.37	1450	600	560	240	280	600	50	325	365	540	80	490	26
TCVP 352	90	2.20	2850	600	560	240	280	600	50	325	365	540	80	490	35
TCVP 456	80	0.37	930	800	730	280	355	700	50	405	450	750	100	700	40
TCVP 454	90	1.10	1450	800	730	280	355	700	50	405	450	750	100	700	48
TCVP 506	80	0.55	930	1000	900	400	400	700	80	510	550	800	70	750	82
TCVP 504	100	2.20	1450	1000	900	400	400	700	80	510	550	800	70	750	90
TCVP 566	90	1.10	930	1150	1050	430	450	800	80	560	600	900	70	850	150
TCVP 564	112	4.00	1450	1150	1050	430	450	800	80	560	600	900	70	850	160
TCVP 636	112	2.20	930	1300	1200	450	500	900	80	610	650	1000	70	950	180
TCVP 634	132	5.50	1450	1300	1200	450	500	900	80	610	650	1000	70	950	150
TCVP 716	132	4.00	930	1350	1270	500	600	1000	80	710	750	1100	70	1050	150
TCVP 714	160	11.00	1450	1350	1270	500	600	1000	80	710	750	1100	70	1050	180
TCVP 806	160	7.50	930	1600	1500	520	700	1300	80	810	850	1200	70	1150	220

Notes:

*Weights are variable according to the motorization (without ancillaries).

AREM

THE VENTILATION PERFORMANCE

INTERNATIONAL

PRESENCE

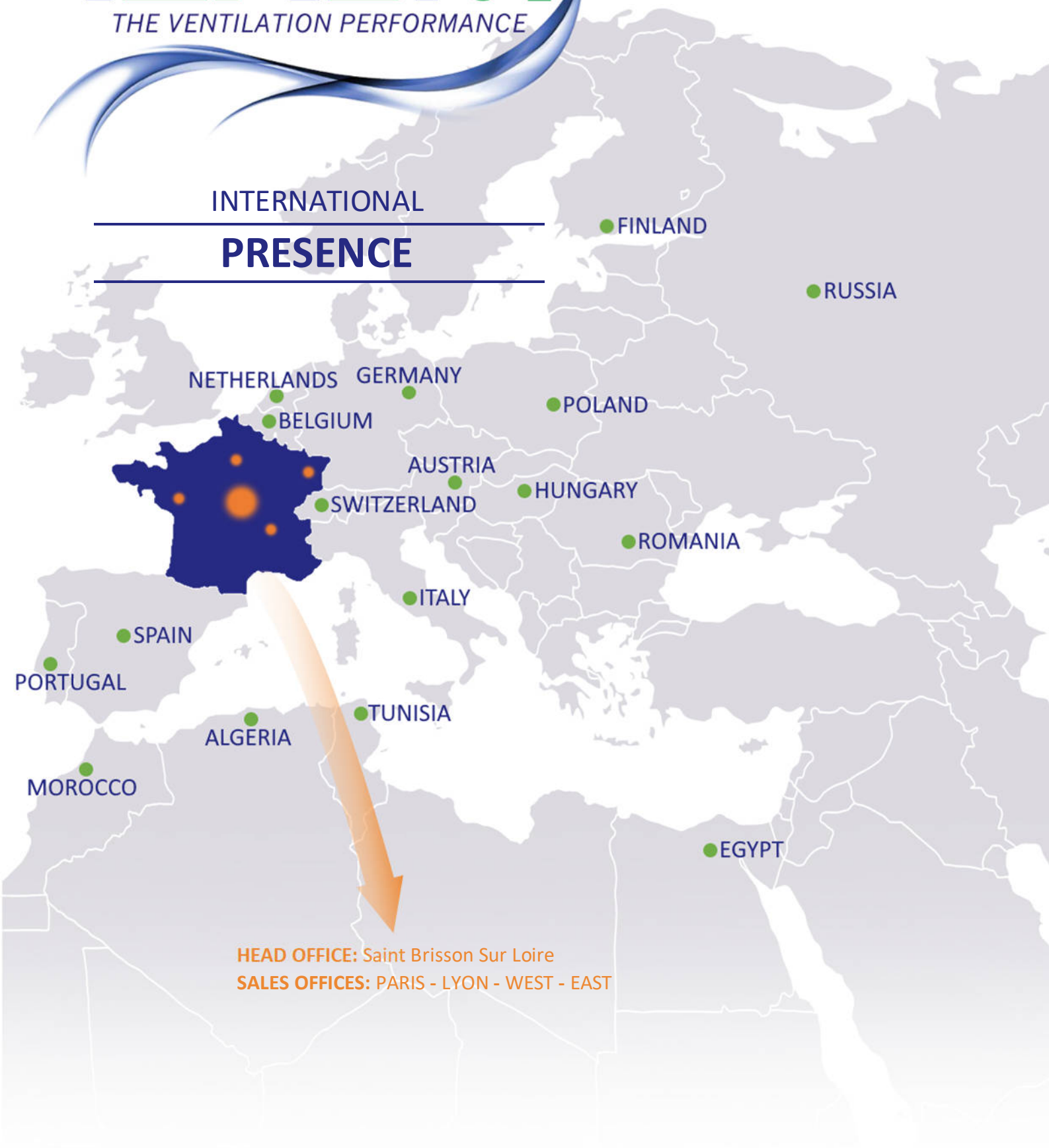

Z. I. - Chemin des Aisières
45500 Saint Brisson Sur Loire, FRANCE
Tel.: +33 (0)2 38 36 71 05 - Fax: +33 (0)2 38 36 70 65
www.arem.fr